PVS Sensors Inc.

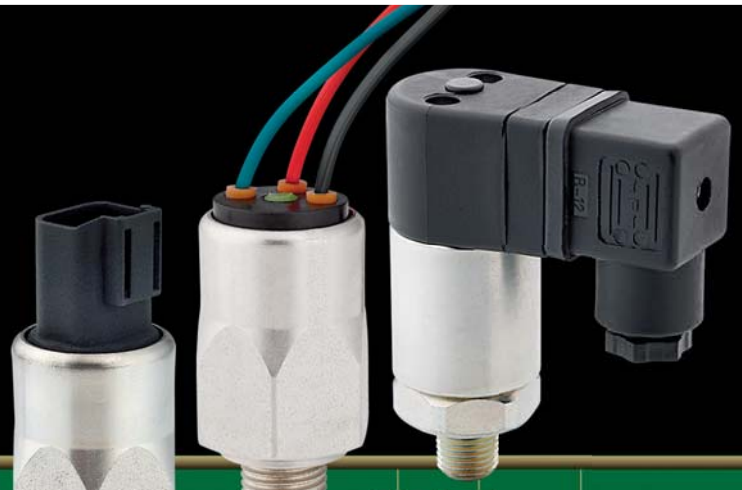

High Pressure

Low Pressure

Differential

Transducers

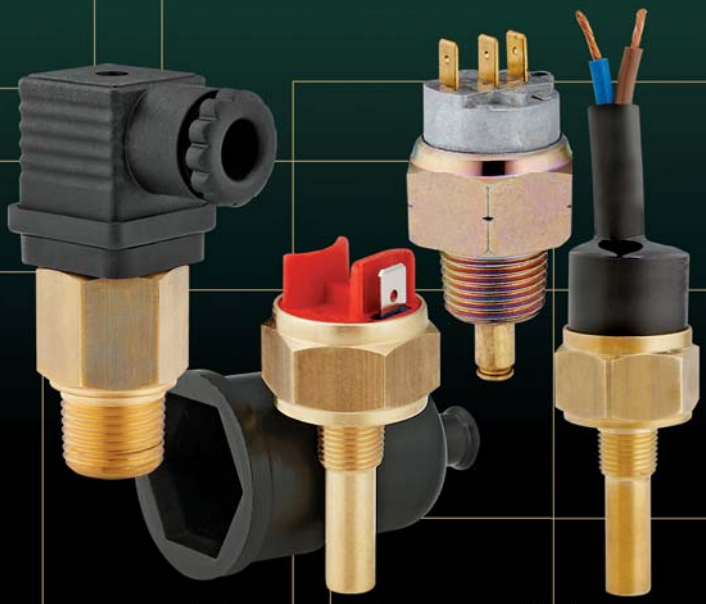

Temperature Switches

Vacuum

Toll Free 1-800-988-1276

P: 864-638-5544 F: 864-638-0005

E Mail: sales@pvssensors.com Web Site: www.pvs-sensors.com

PVS

Sensors Inc.

COMPANY PROFILE

PVS offers a range of USA manufactured pressure, vacuum, temperature and differential switches designed for applications in the Industrial and Mobile Hydraulic field as well as Pneumatic, Water Process, Refrigerant, Air Conditioning, Beverage and other associated industries.

The USA designed and manufactured products are complimented by a competitive range of Temperature and Pressure Transducers.

PVS Sensors Inc. offer a complete custom design and manufacturing service providing custom switch products to meet specific customer needs.

From a simple modification to designing a custom sensor, PVS Sensors engineering and sales staff has an answer for your pressure switch needs.

USA Design, Manufacturing & Sales

PVS Sensors Inc.
2810 Blue Ridge Blvd.
PO Box 100
West Union, SC 29696
800-988-1276 (Toll Free)
864-638-5544 (Phone)
864-638-0005 (Fax)
sales@pvssensors.com

China Sales Office

PVS Sensors
No. 638 Hengfend Rd
Suite 11 ~16, 5a Floor
Zhabei District 200070
Shanghai China
saleschina@pvssensors.com

Visit us online at:
www.pvssensors.com

TABLE OF CONTENTS

PVS Sensors Inc.

DEFINITIONS AND TERMINOLOGY

ACCURACY, (REPEATABILITY) - Accuracy is the maximum allowable set point deviation of a single pressure or temperature switch under one given set of environmental and operational conditions.

ACTUATION AND DEACTUATION POINT - The actuation point (sometimes called set point) is the exact point at which the electrical circuit controlled by the switching element is opened (or closed) on increasing pressure or temperature. The deactuation point is the opposite at which the electrical circuit is closed (or opened) on decreasing pressure or temperature.

DEAD BAND - The dead band sometimes referred to as "differential" or "hysteresis" is the change in pressure between actuation and deactuation set points.

PRESSURE SWITCH - An instrument that upon the increase or decrease of a pressure or vacuum, opens or closes one or more electrical switching elements at a predetermined actuation point (setting).

PRESSURE SENSING ELEMENT - That portion of the pressure switch that is in contact with and moves as a result of a change in pressure of the fluid. The most common type of pressure sensing elements are diaphragms, accordion bellows, bourdon tubes, and pistons.

SINGLE POLE DOUBLE THROW (SPDT) SWITCHING ELEMENT - A SPDT switching element has one normally open, one normally closed and one common terminal. Three terminals mean that the switch can be wired with the circuit either normally open (N/O) or normally closed (N/C), or both.

NORMALLY CLOSED SWITCHING ELEMENT (NC) - Is one in which the terminals are wired so that current can flow through the switching element until pressure is applied to open the electrical circuit.

NORMALLY OPEN SWITCHING ELEMENT (NO) - Is one in which the terminals are wired so that no current can flow through the switching element until the pressure is applied to close the fluid.

PRESSURE, PROOF - Proof Pressure is the maximum pressure which can be applied to any switch without causing permanent degradation.

Electrical Specifications

Please refer to individual data pages for electrical specifications.

Circuit Definitions

Form A - SPST - NO
Single Pole - Single Throw
Normally Open

Form B - SPST - NC
Single Pole - Single Throw
Normally Closed

Form C - SPDT
Single Pole - Double Throw

Standard Electrical Circuit

Wire Color	DIN 43650 Number	C Circuit
Black	1	Common
Green	2	N. Closed
Red	3	N. Open

TECHNICAL DATA

PVS Pressure, Vacuum and Temperature Switches are sealed, vibration resistant and ruggedly built to provide a reliable protection for automatic control of equipment and processes. They are designed for direct or remote mounting and offer a quality product at a competitive price.

Microswitch - Each PVS pressure, vacuum and temperature switch except for the EPA and bi-metal temperature models contain a precision, snap-action microswitch which meets or exceeds industrial standards for reliability; electrical capacity and long life.

The snap action micro switch meets underwriters and CSA specifications for 5 amp or 3 amp rating dependent upon specification type - consult factory for additional data.

Setting - The set point of each switch is preset at the factory as follows:
- Field adjustable series - bottom of range
- Factory set series - at the desired set point

The switches can be ordered for operation with either rising or falling temperature, vacuum or pressure. Reset of the microswitch is automatic and depends upon the dead band or differential of the particular model.

Switch Protection - Standard PVS switches offer excellent protection and long life in most applications. They are also sealed for weatherproof protection. The corrosion-resistant materials in the wetted areas and the standard nitrile diaphragm are suitable for most media. Where required the switches are available with VITON®,KAPTON®, HNBR or EPDM diaphragms and, in some cases, optional steel, brass or stainless steel housings and wetted areas.

Mechanism - Where the pressure switch is subject to higher pressure, either dynamic or static, of over 700 psi, the diaphragm operating mechanism includes an O-ring cushion which absorbs the slight operation motion required while preventing extrusion of the diaphragm material into the piston-to-cylinder clearance.

Gold Contacts - May be required for applications where less than 12VDC and 20 Milliamps

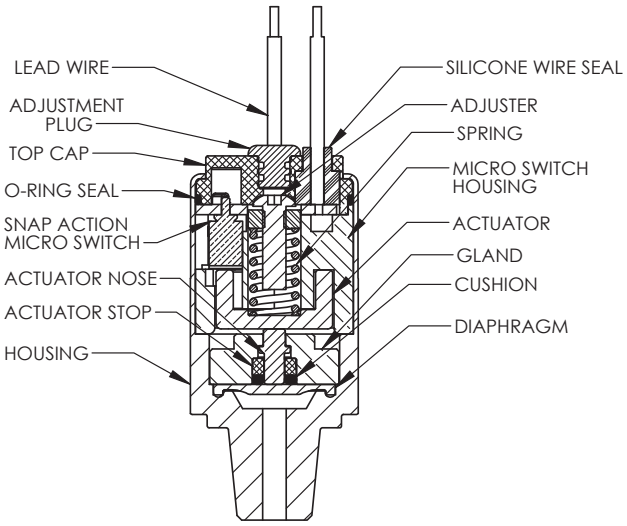

Model BPA Shown

MVA/MVF Vacuum Switch

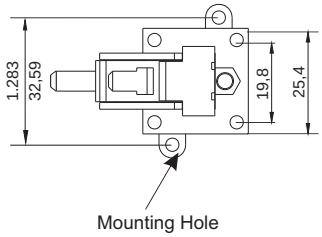

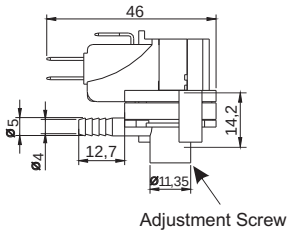

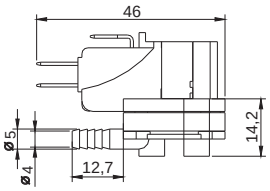

MVA

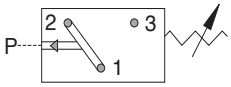

Connection: Type 1

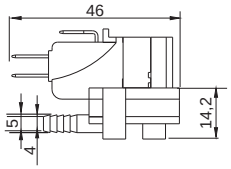

4.0 mm OD Tube Side Entry - Standard

ELECTRICAL:

125/250 VAC
3A, 5A , 16A, 21A

OPERATING VACUUM RANGE:

Vacuum Range: .3 - 28 In Hg
(0.15 - 14 psi)
(10 - 950 mBar)

SWITCH TYPE:

Snap Action

PROOF PRESSURE:

100 PSI (6.9 Bar)

TEMPERATURE RANGE:

-40° to +185°F (-40° to +85°C)
Ambient and Medium

WEIGHT:

0.036 lbs.
(0.02 kg)

APPLICATION MEDIUM:

Air, Water, and Inert Gases

MECHANICAL LIFE:

1,000,000 Cycles

CONNECTION:

4.0mm OD tube Side Entry (standard)
(Optional 1/8" npt, 4.0mm OD Tube Bottom entry)

WETTED MATERIAL:

Diaphragm: EPDM (standard)
(optional Silicone Rubber, TEFLON® and Polyurethane)

Housing: Glass-filled Nylon

ORDERING INFORMATION

Special Order Only - Minimum Quantity Required - Consult Factory

MVA	*- 5*	*- *R*	*- 1*	*- C*	*- 2*
Model	**Set Point**	**Direction**	**Connection**	**Circuit**	**Rating**
MVA Field Adjustable MVF Factory Set	Consult Factory for Adjustment Ranges Specify Set Point Vacuum: .3 - 28 In Hg	R - PSI Rising F - PSI Falling MBR - Bar Rising MBF - Bar Falling **Omit For Model MVA*	1 - 4.0mm OD Tube Side Entry 2 - 1/8" NPT Bottom Entry 3 - 4.0mm OD Tube Bottom Entry	C - SPDT	1 - 3A 2 - 5A 3 - 16A 4 - 21A

PVS Sensors Inc.

AVA/AVF Vacuum Switch

WRAS APPROVED PRODUCT

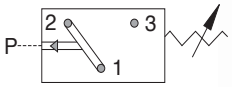

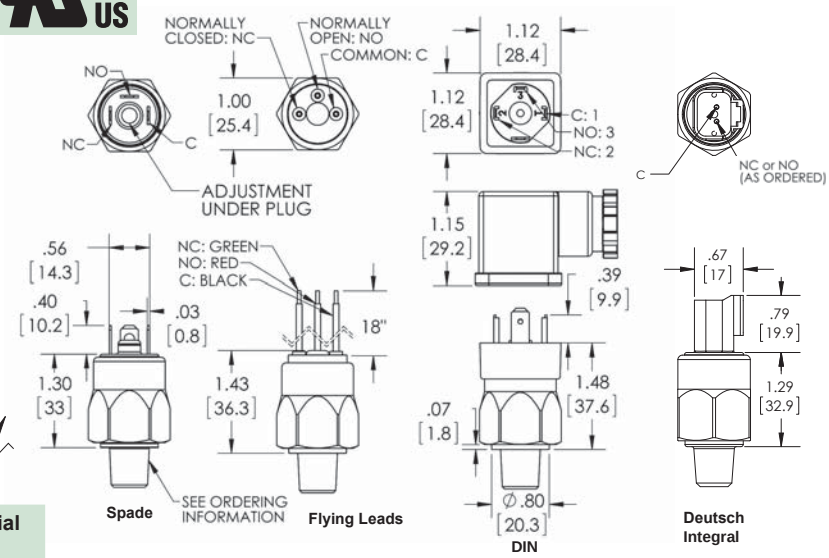

Model	Adjustment Range		Average Differential	
	IN Hg	MilliBar	IN Hg	MilliBar
1	5 - 28	170 - 950	4 - 6	135 - 200

ELECTRICAL:

Standard: 3A, 125VAC - U.L. Recognized*
Option -7: 0.2A, 60VDC - U.L. Recognized*
Option -9: 5A, 250VAC - U.L. Recognized*
5A, 12/24VDC - U.L. Recognized*

MANUFACTURER'S OTHER RATING:

3A @ 40VDC

PROTECTION:

Exposed Terminals – IP00
DIN HC - IP65
Flying Leads, M12, Deutsch Integral - IP69

MECHANICAL LIFE:

1,000,000 cycles

SWITCH TYPE:

Snap Action

REPEATABILITY:

± 2% of full set point range at 70°F (21°C) Ambient Temperature

MAXIMUM OVERPRESSURE:

350 PSI (24 Bar)

TEMPERATURE RANGE:

Buna – N: -15° to +230°F (-26° to 110°C)
EPDM: -10° to +250°F (-23° to 121°C)
KAPTON®: -40° to +230°F (-40° to 110°C)
VITON®: 0° to +250°F (-18° to 121°C)
(® Registered Trademark of DuPont)
HNBR: -36° to +293°F (-38° to 145°C)

WETTED MATERIAL:

Diaphragm: Buna-N (standard)
(optional EPDM, KAPTON®,HNBR,VITON®)

Housing: Brass
(optional 316 Stainless Steel)

WEIGHT:

0.08 LBS
(0.04 kg)

ORDERING INFORMATION

AVA	*- * 1*	*- * R*	*- 4M*	*- A*	*- FL*	*- * 1*
Model	**Set Point**	**Direction**	**Port Size**	**Circuit**	**Terminal**	**Options**
AVA - Field Adjustable AVF - Factory Set	See Above Adjustment Ranges *Model AVF Specify Set Point Required	R - Rising F - Falling MBR - Millibar Rising MBF - Millibar Falling *Omit For Model AVA	2M - 1/8 NPT 4M - 1/4 NPT 2G - 1/8 BSPP 4G - 1/4 BSPP 4S - 7/16X20 SAE MALE 4SW - 7/16X20 SAE Swivel 6S - 9/16X18 SAE MALE M10 - M10X1 M12 - M12X1.5 Consult Factory for Non-Standard	A - SPST / NO B - SPST / NC C - SPDT	SP - 1/4" x 1/32" Spade TS - 6-32 Terminal Screws FL - 18" Flying Leads FLWTF - Weatherpack Tower Female FLWTM - Weatherpack Tower Male FLWSF - Weatherpack Shroud Female FLWSM - Weatherpack Shroud Male H - DIN 43650A Male Half Only HC - DIN 43650A Cable Clamp HN - DIN 43650A 1/2 Conduit (female) HCC - XXX (Specify Length in Inches) HC11A - DIN Light NO/NC 110V HC11B - DIN Light NO/NC 12VDC HC11C - DIN Light NO/NC 24VDC HC11D - Indicating Light Green/Red DI - Deutsch Integral M12 - M12 X 1	* - Omit If Standard 1 - VITON® Diaphragm 2 - EPDM Diaphragm 3 - KAPTON® Diaphragm 13 - HNBR Diaphragm 4 - 316 SS Housing 5 - Spiral Restrictor 6 - Oxygen Cleaned 7 - Gold Contacts 9 - 5 AMP Rating UL - UL Recognized** **For Selected Models Only - Consult Factory 12 - WRAS Approved

HVA/HVF Vacuum Switch

WRAS APPROVED PRODUCT

PVS Sensors Inc.

New Generation
High Impact Plastic Switch

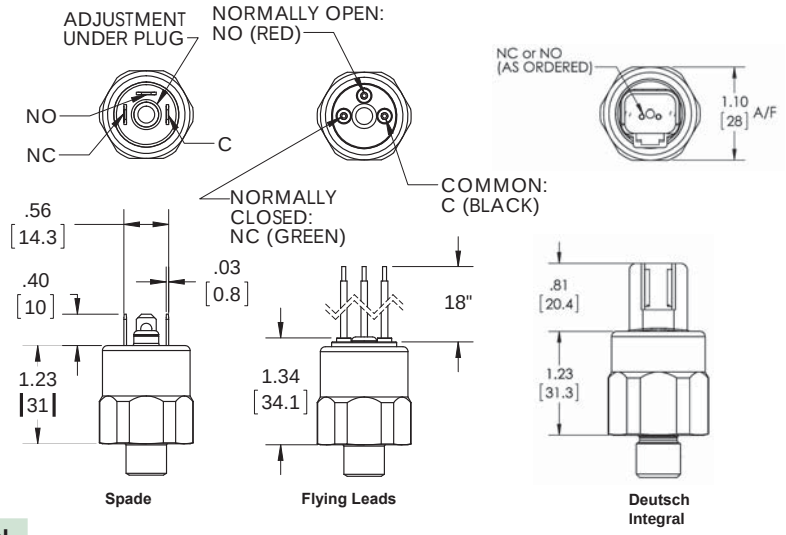

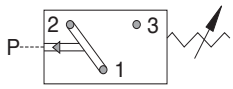

Model	Adjustment Range		Average Differential	
	IN Hg	Millibar	IN Hg	Millibar
1	5 - 28	170 - 950	4 - 6	135 - 200

ELECTRICAL:

Standard: 3A, 125VAC - U.L. Recognized*
Option -7: 0.2A, 60VDC - U.L. Recognized*
Option -9: 5A, 250VAC - U.L. Recognized*
5A, 12/24VDC - U.L. Recognized*

MANUFACTURER'S OTHER RATING:
3A @ 40VDC

PROTECTION:

Exposed Terminals – IP00
Flying Leads, M12, Deutsch Integral - IP69

MECHANICAL LIFE:

1,000,000 cycles

SWITCH TYPE:

Snap Action

REPEATABILITY:

± 2% of full set point range at 70°F (21°C) Ambient Temperature

MAXIMUM OVERPRESSURE:

250 PSI (17Bar)

TEMPERATURE RANGE:

Buna – N: -15° to +230°F (-26° to 110°C)
EPDM: -10° to +250°F (-23° to 121°C)
KAPTON®: -40° to +230°F (-40° to 110°C)
VITON®: 0° to +250°F (-18° to 121°C)
(® Registered Trademark of DuPont)
HNBR: -36° to +293°F (-38° to 145°C)

WETTED MATERIAL:

Diaphragm: Buna-N Standard
(optional EPDM, KAPTON®,HNBR, VITON®)

Housing: Glass Filled Nylon

WEIGHT:

0.08 LBS
(0.04 kg)

ORDERING INFORMATION

HVA	*- * 1*	*- * R*	*- 4M*	*- A*	*- FL*	*- * 1*
Model	**Set Point**	**Direction**	**Port Size**	**Circuit**	**Terminal**	**Options**
HVA - Field Adjustable HVF - Factory Set	See Above Adjustment Ranges **Model HVF Specify Set Point Required*	R - Rising F - Falling MBR - Millibar Rising MBF - Millibar Falling **Omit For Model HVA*	2M - 1/8 NPT 4M - 1/4 NPT 2G - 1/8 BSPP 4G - 1/4 BSPP	A - SPST / NO B - SPST / NC C - SPDT	SP - 1/4" x 1/32" Spade TS - 6-32 Terminal Screws FL - 18" Flying Leads FLWTF - Weatherpack Tower Female FLWTM - Weatherpack Tower Male FLWSF - Weatherpack Shroud Female FLWSM - Weatherpack Shroud Male DI - Deutsch Integral M12 - M12 X 1	* - Omit If Standard 1 - VITON® Diaphragm 2 - EPDM Diaphragm 3 - KAPTON® Diaphragm 13- HNBR Diaphragm 6 - Oxygen Cleaned 7 - Gold Contacts 9 - 5 AMP Rating UL - UL Recognized** **For Selected Models Only - Consult Factory 12 - WRAS Approved

PVS Sensors Inc.

PVA/PVF Vacuum Switch

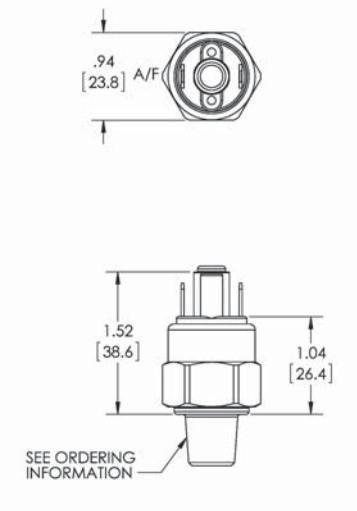

Spade

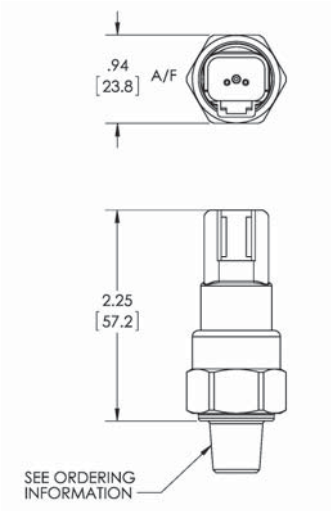

Deutsch Integral

CE RoHS COMPLIANT

Model	Adjustment Range		Average Differential	
	IN Hg	MilliBar	IN Hg	MilliBar
1	3 - 28	100 - 950	4 - 6	135 - 200

ELECTRICAL:

100 VA Max Voltage 42 VDC
Gold contacts may be required for less than 12 VDC and 20 milliamp

PROTECTION:

IP69 except exposed terminals – IP00

MECHANICAL LIFE:

1,000,000 cycles

SWITCH TYPE:

Creep Action

REPEATABILITY:

± 2% of full set point range at 70°F (21°C) Ambient Temperature

MAXIMUM OVERPRESSURE:

350 PSI (24 Bar)

TEMPERATURE RANGE:

Buna – N: -15° to +230°F (-26° to 110°C)
EPDM: -10° to +250°F (-23° to 121°C)
KAPTON®: -40° to +230°F (-40° to 110°C)
VITON®: 0° to +250°F (-18° to 121°C)
(® Registered Trademark of DuPont)
HNBR: -36.4° to +293°F (-38° to 145°C)

WETTED MATERIAL:

Diaphragm: Buna-N
(optional KAPTON®, EPDM,HNBR and VITON®)

Housing: Brass
(optional Steel -Electroless Nickel Plated, 316 Stainless Steel or Zinc Plated Steel)

WEIGHT:

0.15 LBS
(0.07 kg)

ORDERING INFORMATION

PVA	*- * 1*	*- * R*	*- 4M*	*- A*	*- SP*	*- * 1*
Model	**Set Point**	**Direction**	**Port Size**	**Circuit**	**Terminal**	**Options**
PVA - Field Adjustable PVF - Factory Set	See Above Adjustment Range ** Model PVF Specify Set Point Required*	R - PSI Rising F - PSI Falling BR - Bar Rising BF - Bar Falling **Omit For Model PVA*	2M - 1/8 NPT 4M - 1/4 NPT 2G - 1/8 BSPP 4G - 1/4 BSPP 4S - 7/16X20 SAE MALE 6S - 9/16X18 SAE MALE M10 - M10X1 M12 - M12X1.5 *Consult Factory for Non-Standard*	A - SPST / NO B - SPST / NC	SP - 1/4" x 1/32" Spade TS - 6-32 Terminal Screws FL - 18" Flying Leads FLWTF - Weatherpack Tower Female FLWTM - Weatherpack Tower Male FLWSF - Weatherpack Shroud Female FLWSM - Weatherpack Shroud Male DI - Deutsch Integral	* - Omit If Standard 1 - VITON® Diaphragm 2 - EPDM Diaphragm 3 - KAPTON® Diaphragm 13 - HNBR Diaphragm 4 - 316 SS Housing 4A - Steel - Electroless Nickel Plated 4B - Zinc Plated Steel 5 - Spiral Restrictor 6 - Oxygen Cleaned 7 - Gold Contacts

MPA/MPF Pressure Switch

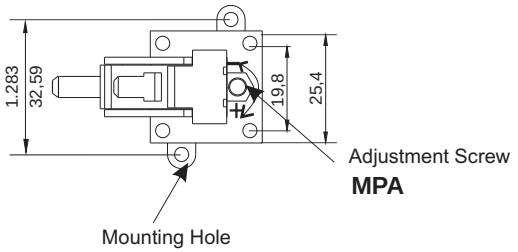

Connection:

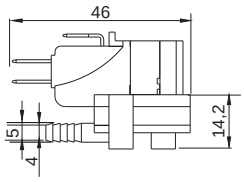

4.0 mm Tube Side Entry

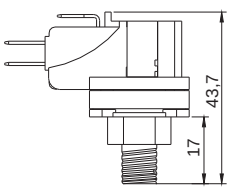

1/8" NPT Bottom Entry

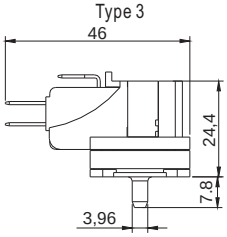

4.0mm Tube Bottom Entry

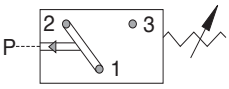

ELECTRICAL:

12/24 VDC - 125/250 VAC
3A, 5A , 16A, 21A

PROOF PRESSURE:

100 PSI (6.9 Bar)

MECHANICAL LIFE:

1,000,000 Cycles

ADJUSTABLE PRESSURE RANGES:

	In. H_2O	mbar	psi
1) 5A	3 to 20	7 to 50	0.1 to 0.70
2) 5A/16A	20 to 40	50 to 100	0.70 to 1.5
3) 5A/16A	30 to 80	80 to 200	1.2 to 3
4) 5A/16A	60 to 200	150 to 500	2.20 to 7.30
5) 5A/16A	200 to 400	500 to 1000	7.30 to 14.5
6) 5A/16A	400 to 800	1000 to 2000	14.5 to 30
7) 5A/16A	800 to 1600	2000 to 4000	30 to 60

TEMPERATURE RANGE:

-40° to +185°F (-40° to +85°C)
Ambient and Medium

CONNECTION:

1/8" NPT - standard
(optional 4.0mm OD tube Side or Bottom Entry)

SWITCH TYPE:

Snap Action

WEIGHT:

0.036 lbs.
(0.02 kg)

WETTED MATERIAL:

Diaphragm: EPDM (standard)
(optional Silicone Rubber, TEFLON® and Polyurethane)

Housing: Glass-filled Nylon

OPERATING PRESSURE RANGE:

Pressure Range: 0.05 - 60 PSI
(3.5 - 4200 mBar)

APPLICATION MEDIUM:

Air, Water, and Inert Gases

ORDERING INFORMATION

Special Order Only - Minimum Quantity Required - Consult Factory

MPA	*- 5*	*- *R*	*- 2*	*- C*	*- 2*
Model	**Set Point**	**Direction**	**Connection**	**Circuit**	**Rating**
MPA Field Adjustable MPF Factory Set	See Adjustable Model Ranges Above Specify Set Point Pressure: 0.05 - 60 PSI	R - PSI Rising F - PSI Falling MBR - Bar Rising MBF - Bar Falling **Omit For Model MPA*	1 - 4.0mm OD Tube Side Entry 2 - 1/8" NPT (standard) Bottom Entry 3 - 4.0mm OD Tube Bottom Entry	C - SPDT	1 - 3A 2 - 5A 3 - 16A 4 - 21A

PVS Sensors Inc.

LPF Pressure Switch

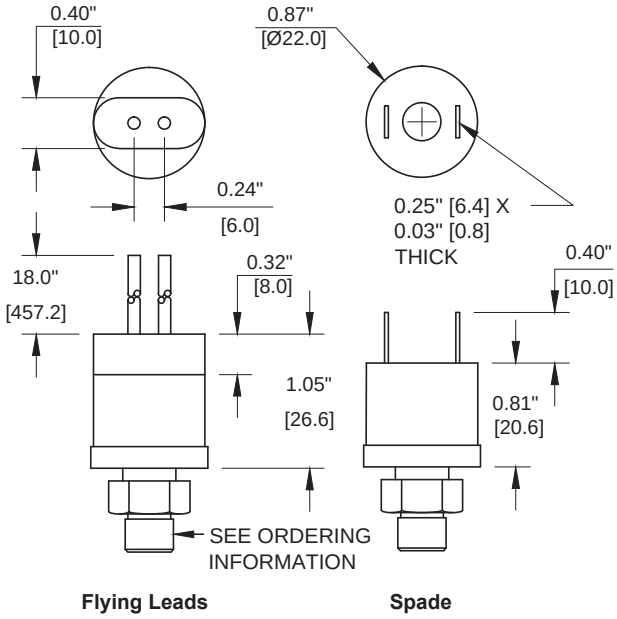

RoHS COMPLIANT

ELECTRICAL:
24V/125VA, 120V/375VA,
240V/375VA, 6A/36VDC
Max Amps @ 12 VDC - 13.5

PROTECTION:
IP68 except exposed terminals – IP00

MECHANICAL LIFE:
150,000 cycles

SWITCH TYPE:
Snap Action

REPEATABILITY:
± 3 PSI of set point

MAXIMUM OPERATING PRESSURE:
375 PSI (26 Bar) for actuation up to 150 PSI (10 Bar)
750 PSI (52 Bar) for actuation from 150-650 PSI (10-45 Bar)

PRESSURE RANGE:
LPF: 5 - 650 PSI (0.35 - 45 Bar)

HOUSING:
Plastic

WEIGHT:
0.10 LBS
(0.05 kg)

TEMPERATURE RANGE:
-22° to +180°F (-30° to +82°C)
Ambient and Medium

WETTED MATERIAL:
Diaphragm: Stainless Steel
Port: Brass

PROOF PRESSURE:
500 PSI (35 Bar)
800 PSI (55 Bar)

ORDERING INFORMATION

Minimum Order Required - Consult Factory

LPF	*- 50*	*- R*	*- 4M*	*- A*	*- FL*
Model	**Set Point**	**Direction**	**Port Size**	**Circuit**	**Terminal**
LPF Factory Set	Specify Set Point 5 - 650 PSI (.35 - 45 Bar)	R - PSI Rising F - PSI Falling BR - Bar Rising BF - Bar Falling	2M - 1/8 NPT* 4M - 1/4 NPT 2G - 1/8 BSPP 4G - 1/4 BSPP 4S - 7/16 X 20 SAE MALE 4SF - 7/16 X 20 SAE FEMALE W/Depressor Pin *Standard	A - SPST / NO B - SPST / NC	SP - 1/4" x 1/32" Spade FL - 18" Flying Leads FLWTF - Weatherpack Tower Female FLWTM - Weatherpack Tower Male FLWSF - Weatherpack Shroud Female FLWSM - Weatherpack Shroud Male Consult Factory for Longer Leads

PVS Sensors Inc.

SPF Pressure Switch

ALL STAINLESS STEEL CONSTRUCTION

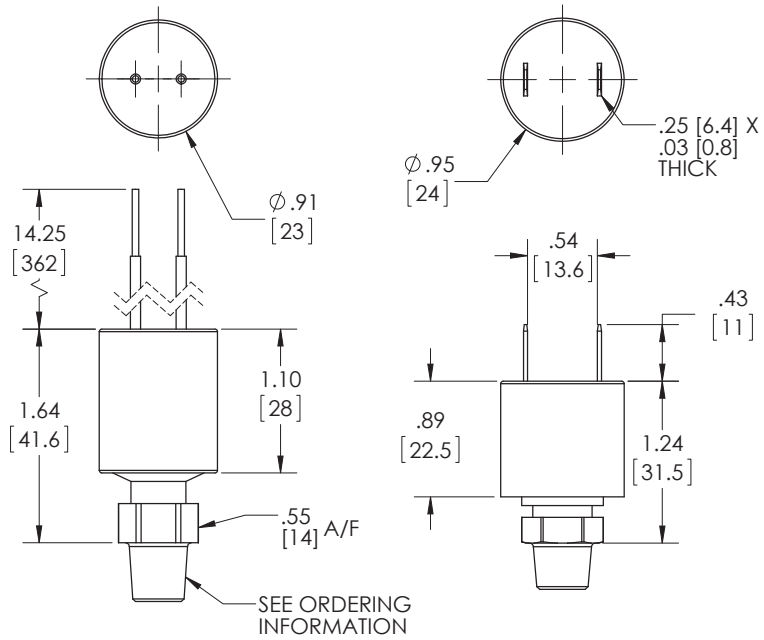

Flying Leads

Spade

CE RoHS COMPLIANT

ELECTRICAL:

24V/125 VA, 120/240V/375 VA, 6A/36 VDC
Maximum Amperage @ 12 VDC - 13.5 Amp

PROTECTION:

IP68 except exposed terminals – IP00

MECHANICAL LIFE:

150,000 cycles

SWITCH TYPE:

Snap Action

REPEATABILITY:

± 3 PSI of set point

MAXIMUM OPERATING PRESSURE:

1000 PSI (69 Bar) for set point pressures to 700 PSI (48 Bar)
2500 PSI (172 Bar) for set point presures from 700 psi (48 Bar) to 2000 PSI (138 Bar)

PRESSURE RANGES:

For Set Points From:
5 - 700 psi (.35 - 48 Bar)
700 - 2000 psi (48 - 138 Bar)

WETTED MATERIAL:

Diaphragm: Stainless Steel
Port: Stainless Steel
Housing: Stainless Steel

WEIGHT:

0.10 LBS
(0.05 kg)

TEMPERATURE RANGE:

-22° to +180°F (-30° to +82°C)

ORDERING INFORMATION

Minimum Order Required - Consult Factory

SPF	*- 50*	*- R*	*- 4M*	*- A*	*- FL*
Model	**Set Point**	**Direction**	**Port Size**	**Circuit**	**Terminal**
SPF Factory Set	Specify Set Point 5 - 2000 PSI (.35 - 138 Bar)	R - PSI Rising F - PSI Falling BR - Bar Rising BF - Bar Falling	2M - 1/8 NPT* 4M - 1/4 NPT 2G - 1/8 BSPP 4G - 1/4 BSPP 4S - 7/16 X 20 SAE MALE *Standard All Others Special Order Only	A - SPST / NO B - SPST / NC	SP - 1/4" x 1/32" Spade FL - 18" Flying Leads FLWTF - Weatherpack Tower Female FLWTM - Weatherpack Tower Male FLWSF - Weatherpack Shroud Female FLWSM - Weatherpack Shroud Male Consult Factory for Longer Leads

PMA/PMF Pressure Switch

PVS Sensors Inc.

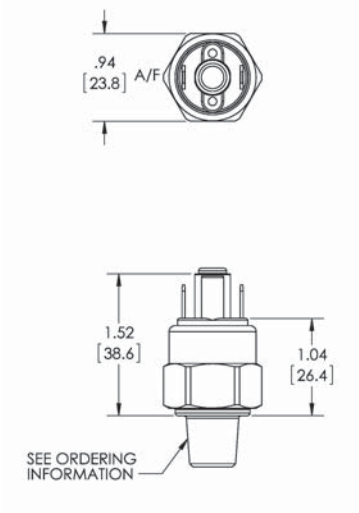

Spade

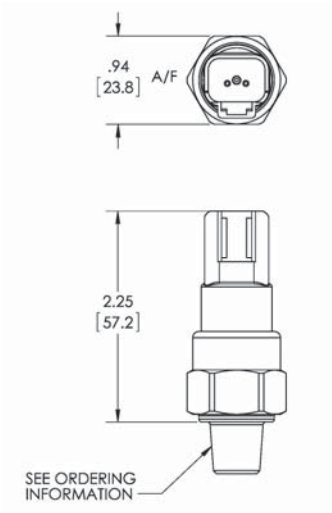

Deutsch Integral

Model	Adjustment Range PSI	Adjustment Range Bar	Average Differential
1	2 - 25	0.14 - 1.7	Less than 5% of Actuation Point
2	20 - 100	1.4 - 6.9	
3	50 - 150	3.5 - 10	

ELECTRICAL:

100 VA Max Voltage 42 VDC
Gold contacts may be required for less than 12 VDC and 20 milliamp

PROTECTION:

IP69 except exposed terminals – IP00

MECHANICAL LIFE:

1,000,000 cycles

SWITCH TYPE:

Creep Action

REPEATABILITY:

± 2% of full set point range at 70°F (21°C) Ambient Temperature

MAXIMUM OVERPRESSURE:

350 PSI (24 Bar)

TEMPERATURE RANGE:

Buna – N: -15° to +230°F (-26° to 110°C)
EPDM: -10° to +250°F (-23° to 121°C)
KAPTON®: -40° to +230°F (-40° to 110°C)
VITON®: 0° to +250°F (-18° to 121°C)
(® Registered Trademark of DuPont)
HNBR: -36° to +293°F (-38° to 145°C)

WETTED MATERIAL:

Diaphragm: Buna-N (optional EPDM,HNBR, VITON® and KAPTON®)

Housing: Brass (Optional Steel - Electroless Nickel Plated, 316 Stainless Steel or Zinc Plated Steel)

WEIGHT:

0.15 LBS (0.07 kg)

ORDERING INFORMATION

PMA	*- * 2*	*- * R*	*- 4M*	*- A*	*- SP*	*- * 1*
Model	**Set Point**	**Direction**	**Port Size**	**Circuit**	**Terminal**	**Options**
PMA - Field Adjustable PMF - Factory Set	See Above Adjustment Ranges ** Model PMF Specify Set Point Required*	R - PSI Rising F - PSI Falling BR - Bar Rising BF - Bar Falling **Omit For Model PMA*	2M - 1/8 NPT 4M - 1/4 NPT 2G - 1/8 BSPP 4G - 1/4 BSPP 4S - 7/16X20 SAE MALE 6S - 9/16X18 SAE MALE M10 - M10X1 M12 - M12X1.5 *Consult Factory for Non-Standard*	A - SPST / NO B - SPST / NC	SP - 1/4" x 1/32" Spade TS - 6-32 Terminal Screws FL - 18" Flying Leads FLWTF - Weatherpack Tower Female FLWTM - Weatherpack Tower Male FLWSF - Weatherpack Shroud Female FLWSM - Weatherpack Shroud Male DI - Deutsch Integral	* - Omit If Standard 1 - VITON® Diaphragm 2 - EPDM Diaphragm 3 - KAPTON® Diaphragm 13- HNBR Diaphragm 4 - 316 SS Housing 4A - Steel - Electroless Nickel Plated 4B - Zinc Plated Steel 5 - Spiral Restrictor 6 - Oxygen Cleaned 7 - Gold Contacts

PVS Sensors Inc.

APA/APF Pressure Switch

WRAS APPROVED PRODUCT

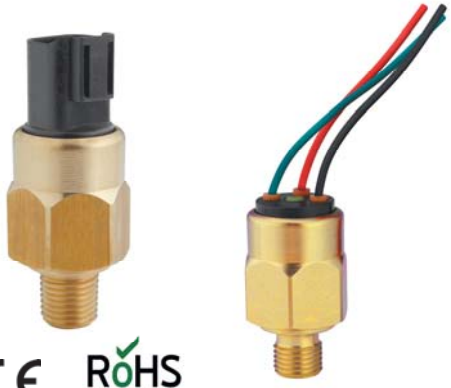

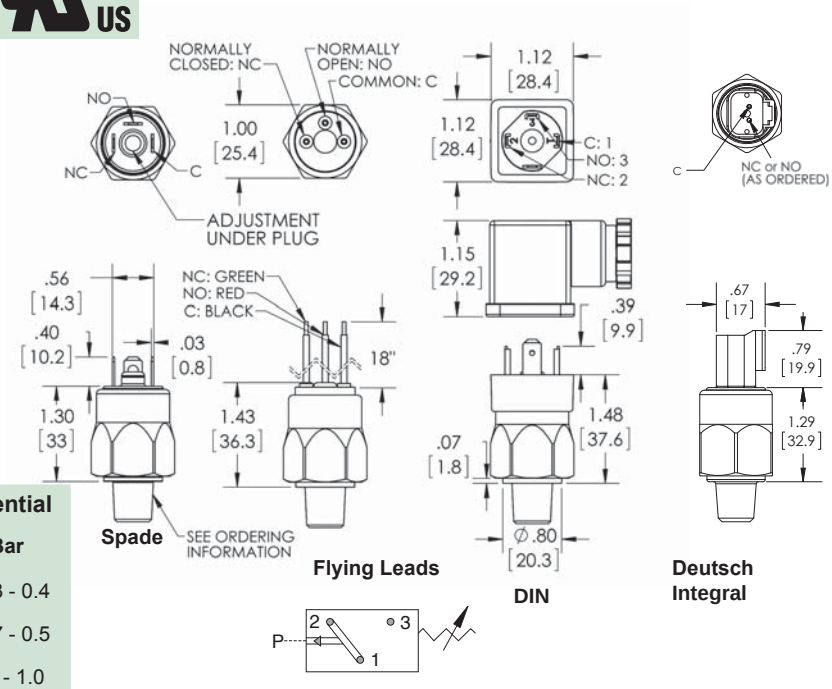

Model	Adjustment Range		Average Differential	
	PSI	Bar	PSI	Bar
1	3 - 20	0.2 - 1.4	2 - 5	0.13 - 0.4
2	15 - 80	1.03 - 6	4 - 7	0.27 - 0.5
3	50 - 150	3.5 - 10	7 - 15	0.7 - 1.0

ELECTRICAL:

Standard: 3A, 125VAC - U.L. Recognized*
Option -7: 0.2A, 60VDC - U.L. Recognized*
Option -9: 5A, 250VAC - U.L. Recognized*
5A, 12/24VDC - U.L. Recognized*

MANUFACTURER'S OTHER RATING:

3A @ 40VDC

PROTECTION:

Exposed Terminals – IP00
DIN HC - IP65
Flying Leads, M12, Deutsch Integral - IP69

MECHANICAL LIFE:

1,000,000 cycles

SWITCH TYPE:

Snap Action

REPEATABILITY:

± 2% of full set point range at 70°F (21°C) Ambient Temperature

MAXIMUM OVERPRESSURE:

350 PSI (24 Bar)

TEMPERATURE RANGE:

Buna – N: -15° to +230°F (-26° to 110°C)
EPDM: -10° to +250°F (-23° to 121°C)
KAPTON®: -40° to +230°F (-40° to 110°C)
VITON®: 0° to +250°F (-18° to 121°C)
(® Registered Trademark of DuPont)
HNBR: -36° to +293°F (-38° to 145°C)

WETTED MATERIAL:

Diaphragm: Buna-N Standard
(optional EPDM, KAPTON®, HNBR, VITON®)
Housing: Brass
(optional Steel - Electroless Nickel Plated)
(optional 316 Stainless Steel)

WEIGHT:

0.15 LBS
(0.07 kg)

ORDERING INFORMATION

APA	*- * 2*	*- * R*	*- 4M*	*- A*	*- FL*	*- * 1*
Model	**Set Point**	**Direction**	**Port Size**	**Circuit**	**Terminal**	**Options**
APA - Field Adjustable APF - Factory Set	See Above Adjustment Ranges ** Model APF Specify Set Point Required*	R - PSI Rising F - PSI Falling BR - Bar Rising BF - Bar Falling **Omit For Model APA*	2M - 1/8 NPT 4M - 1/4 NPT 2G - 1/8 BSPP 4G - 1/4 BSPP 4S - 7/16X20 SAE MALE 4SW - 7/16X20 SAE Swivel 6S - 9/16X18 SAE MALE M10 - M10X1 M12 - M12X1.5 *Consult Factory for Specials.*	A - SPST / NO B - SPST / NC C - SPDT	SP - 1/4" x 1/32" Spade TS - 6-32 Terminal Screws FL - 18" Flying Leads FLWTF - Weatherpack Tower Female FLWTM - Weatherpack Tower Male FLWSF - Weatherpack Shroud Female FLWSM - Weatherpack Shroud Male H - DIN 43650A Male Half Only HC - DIN 43650A Cable Clamp HN - DIN 43650A 1/2 Conduit (female) HCC - XXX (Specify Length in Inches) HC11A - DIN Light NO/NC 110V HC11B - DIN Light NO/NC 12VDC HC11C - DIN Light NO/NC 24VDC HC11D - Indicating Light Green/Red DI - Deutsch Integral M12 - M12 X 1	* - Omit If Standard 1 - VITON® Diaphragm 2 - EPDM Diaphragm 3 - KAPTON® Diaphragm 13 - HNBR Diaphragm 4 - 316 SS Housing 4A - Steel - Electroless Nickel Plated 5 - Spiral Restrictor 6 - Oxygen Cleaned 7 - Gold Contacts 9 - 5 AMP Rating UL - UL Recognized** **For Selected Models Only - Consult Factory 12 - WRAS Approved

HPA/HPF Pressure Switch

WRAS APPROVED PRODUCT

PVS Sensors Inc.

New Generation
High Impact Plastic Switch

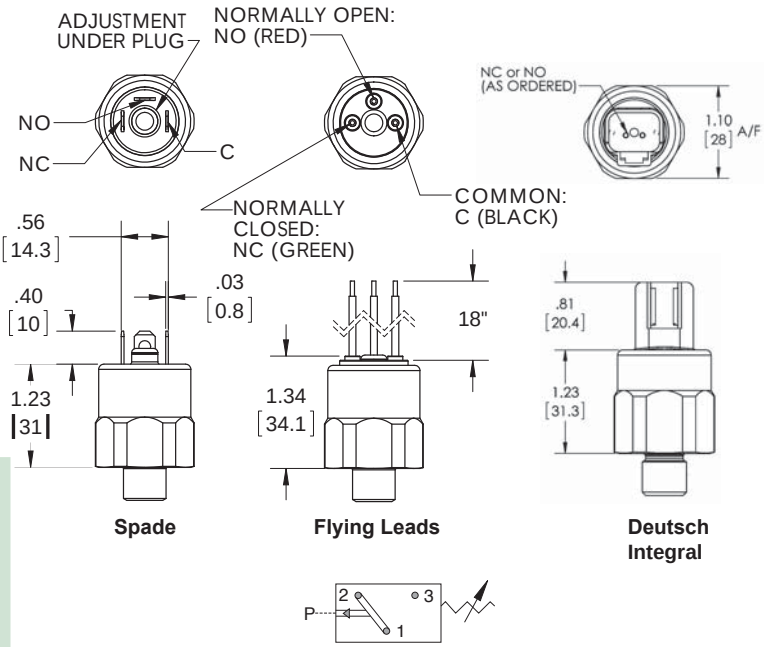

Model	Adjustment Range		Average Differential	
	PSI	Bar	PSI	Bar
1	3 - 20	0.2 - 1.4	2 - 5	0.13 - 0.4
2	15 - 80	1.03 - 6	4 - 7	0.27 - 0.5
3	50 - 150	3.5 - 10	7 - 15	0.5 - 1.0

ELECTRICAL:

Standard: 3A, 125VAC - U.L. Recognized*
Option -7: 0.2A, 60VDC - U.L. Recognized*
Option -9: 5A, 250VAC - U.L. Recognized*
5A, 12/24VDC - U.L. Recognized*

MANUFACTURER'S OTHER RATING:
3A @ 40VDC

PROTECTION:

Exposed Terminals – IP00
Flying Leads, M12, Deutsch Integral - IP69

MECHANICAL LIFE:

1,000,000 cycles

SWITCH TYPE:

Snap Action

REPEATABILITY:

± 2% of full set point range at 70°F (21°C) Ambient Temperature

MAXIMUM OVERPRESSURE:

250 PSI (17 Bar)

TEMPERATURE RANGE:

Buna – N: -15° to +230°F (-26° to 110°C)
EPDM: -10° to +250°F (-23° to 121°C)
KAPTON®: -40° to +230°F (-40° to 110°C)
VITON®: 0° to +250°F (-18° to 121°C)
(® Registered Trademark of DuPont)
HNBR: -36° to +293°F (-38° to 145°C)

WETTED MATERIAL:

Diaphragm: Buna-N Standard
(optional EPDM, KAPTON®,HNBR,VITON®)

Housing: Glass Filled Nylon

WEIGHT:

0.08 LBS
(0.04 kg)

ORDERING INFORMATION

HPA	*- * 2*	*- * R*	*- 4M*	*- A*	*- FL*	*- * 1*
Model	**Set Point**	**Direction**	**Port Size**	**Circuit**	**Terminal**	**Options**
HPA - Field Adjustable HPF - Factory Set	See Above Adjustment Ranges ** Specify Set Point Required for model HPF*	R - PSI Rising F - PSI Falling BR - Bar Rising BF - Bar Falling **Omit For Model HPA*	2M - 1/8 NPT 4M - 1/4 NPT 2G - 1/8 BSPP 4G - 1/4 BSPP	A - SPST / NO B - SPST / NC C - SPDT	SP - 1/4" x 1/32" Spade TS - 6-32 Terminal Screws FL - 18" Flying Leads FLWTF - Weatherpack Tower Female FLWTM - Weatherpack Tower Male FLWSF - Weatherpack Shroud Female FLWSM - Weatherpack Shroud Male DI - Deutsch Integral M12 - M12 X 1	* - Omit If Standard 1 - VITON® Diaphragm 2 - EPDM Diaphragm 3 - KAPTON® Diaphragm 13- HNBR Diaphragm 6 - Oxygen Cleaned 7 - Gold Contacts 9 - 5 AMP Rating UL - UL Recognized** **For Selected Models Only - Consult Factory 12 - WRAS Approved

HAA/WAA Pressure Switch

Adjustable Low Pressure

PVS Sensors Inc.

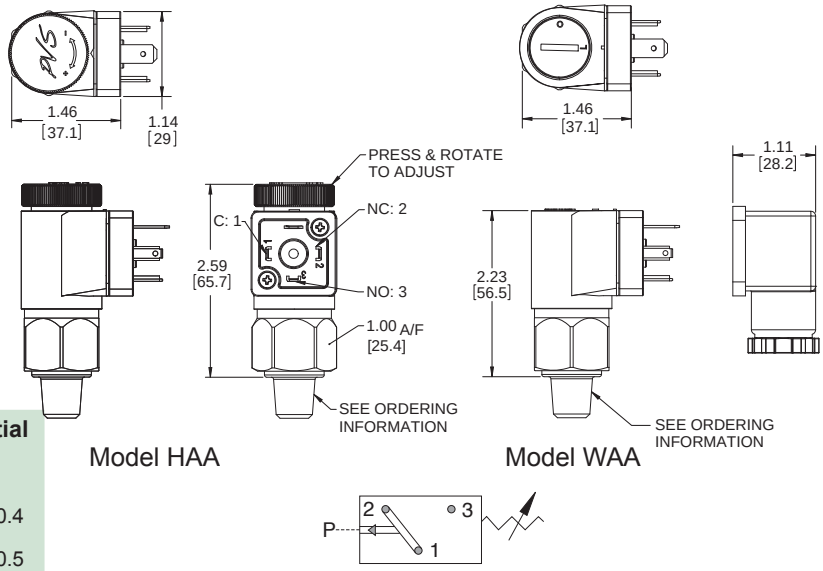

Model	Adjustment Range		Average Differential	
	PSI	Bar	PSI	Bar
1	3 - 20	0.2 - 1.4	2 - 5	0.13 - 0.4
2	15 - 80	1.03 - 6	4 - 7	0.27 - 0.5
3	50 - 150	3.5 - 10	7 - 15	0.5 - 1.0

ELECTRICAL:

Standard: 3A, 125VAC - U.L. Recognized*
Option -7: 0.2A, 60VDC - U.L. Recognized*
Option -9: 5A, 250VAC - U.L. Recognized*
5A,12/24VDC- U.L Recognized*

MANUFACTURER'S OTHER RATING:

3A @ 40VDC

PROTECTION:

IP65 except exposed terminals – IP00

MECHANICAL LIFE:

1,000,000 cycles

SWITCH TYPE:

Snap Action

REPEATABILITY:

± 2% of full set point range at 70°F (21°C) Ambient Temperature

MAXIMUM OVERPRESSURE:

350 PSI (24 Bar)

TEMPERATURE RANGE:

Buna – N: -15° to +230°F (-26° to 110°C)
EPDM: -10° to +250°F (-23° to 121°C)
KAPTON®: -40° to +230°F (-40° to 110°C)
VITON®: 0° to +250°F (-18° to 121°C)
(® Registered Trademark of DuPont)
HNBR: -36° to +293°F (-38° to 145°C)

WETTED MATERIAL:

Diaphragm: Buna-N (Standard)
(optional EPDM, KAPTON®, HNBR,VITON®)

Housing: Brass
(optional 316 Stainless Steel)

WEIGHT:

0.15 LBS
(0.07 kg)

ORDERING INFORMATION

HAA	*- 2*	*- 4M*	*- C*	*- H*	*- * 1*
Model	**Set Point**	**Port Size**	**Circuit**	**Terminal**	**Options**
HAA - Hand Adjustable WAA - Field Adjustable	See Above Adjustment Ranges	2M - 1/8 NPT 4M - 1/4 NPT 2G - 1/8 BSPP 4G - 1/4 BSPP 4S - 7/16 X 20 SAE MALE 4SW - 7/16 x 20 SAE Swivel 6S - 9/16 X 18 SAE MALE M10 - M10X1 M12 - M12X1.5 *Consult Factory for Specials.*	A - SPST / NO B - SPST / NC C - SPDT	H - DIN 43650A Male Half Only HC - DIN 43650A Cable Clamp HN - DIN 43650A 1/2 Conduit (female) HCC - XXX (Specify Length in Inches) HC11A - DIN Light NO/NC 110V HC11B - DIN Light NO/NC 12VDC HC11C - DIN Light NO/NC 24VDC HC11D - Indicating Light Green/Red	* - Omit If Standard 1 - VITON® Diaphragm 2 - EPDM Diaphragm 3 - KAPTON® Diaphragm 13 -HNBR Diaphragm 4 - 316 SS Housing 5 - Spiral Restrictor 6 - Oxygen Cleaned 7 - Gold Contacts 9 - 5 AMP Rating UL - UL Recognized** **For Selected Models Only - Consult Factory

HBA/WBA Pressure Switch

Adjustable High Pressure

PVS Sensors Inc.

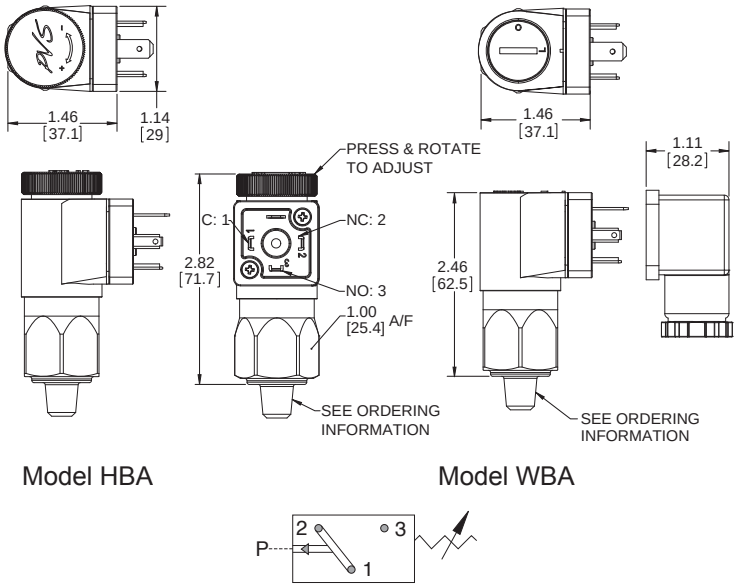

Model	Adjustment Range		Average Differential	
	PSI	Bar	PSI	Bar
1	5 - 85	.35 - 6	3 - 10	0.21 - 0.7
1A	65 - 300	4 - 20	8 - 30	0.55 - 2.1
2	125 - 600	8 - 40	20 - 80	1.3 - 5.5
3	300 - 2500	20 - 170	50 - 300	3.2 - 20
4	1000 - 6000	69 - 400	150 - 600	10 - 41
5	500 - 3500	35 - 240	75 - 300	5 - 24

ELECTRICAL:

Standard: 3A, 125VAC - U.L. Recognized*
Option -7: 0.2A, 60VDC - U.L. Recognized*
Option -9: 5A, 250VAC - U.L. Recognized*
5A,12/24VDC - U.L.Recognized*

MANUFACTURER'S OTHER RATING:
3A @ 40VDC

PROTECTION:

IP65 except exposed terminals – IP00

MECHANICAL LIFE:

1,000,000 cycles

SWITCH TYPE:

Snap Action

REPEATABILITY:

± 2% of full set point range at 70°F (21°C) Ambient Temperature

MAXIMUM OVERPRESSURE:

9000 PSI (620 Bar)

TEMPERATURE RANGE:

Buna – N: -15° to +230°F (-26° to 110°C)
EPDM: -10° to +250°F (-23° to 121°C)
KAPTON®: -40° to +230°F (-40° to 110°C)
VITON®: 0° to +250°F (-18° to 121°C)
(® Registered Trademark of DuPont)
HNBR: -36° to +293°F (-38° to 145°C)

WETTED MATERIAL:

Diaphragm: Buna-N (Standard)
(optional EPDM, KAPTON®, HNBR,VITON®)

Housing: Trivalent Chromate Plated Steel
(optional 316 Stainless Steel)

WEIGHT:

0.2 LBS
(0.09 kg)

ORDERING INFORMATION

HBA	*- 2*	*- 4M*	*- C*	*- H*	*- * 1*
Model	**Set Point**	**Port Size**	**Circuit**	**Terminal**	**Options**
HBA - Hand Adjustable WBA - Field Adjustable	See Above Adjustment Ranges	2M - 1/8 NPT 4M - 1/4 NPT 2G - 1/8 BSPP 4G - 1/4 BSPP 4S - 7/16 X 20 SAE MALE 4SW - 7/16 x 20 SAE Swivel 6S - 9/16 X 18 SAE MALE M10 - M10X1 M12 - M12X1.5 *Consult Factory for Specials*	A - SPST / NO B - SPST / NC C - SPDT	H - DIN 43650A Male Half Only HC - DIN 43650A Cable Clamp HN - DIN 43650A 1/2 Conduit (female) HCC - XXX (Specify Length in Inches) HC11A - DIN Light NO/NC 110V HC11B - DIN Light NO/NC 12VDC HC11C - DIN Light NO/NC 24VDC HC11D - Indicating Light Green/Red	* - Omit If Standard 1 - VITON® Diaphragm 2 - EPDM Diaphragm 3 - KAPTON® Diaphragm 13 - HNBR Diaphragm 4 - 316 SS Housing 5 - Spiral Restrictor 6 - Oxygen Cleaned 7 - Gold Contacts 9 - 5 AMP Rating UL - UL Recognized** **For Selected Models Only - Consult Factory

PVS Sensors Inc.

BPA/BPF Pressure Switch

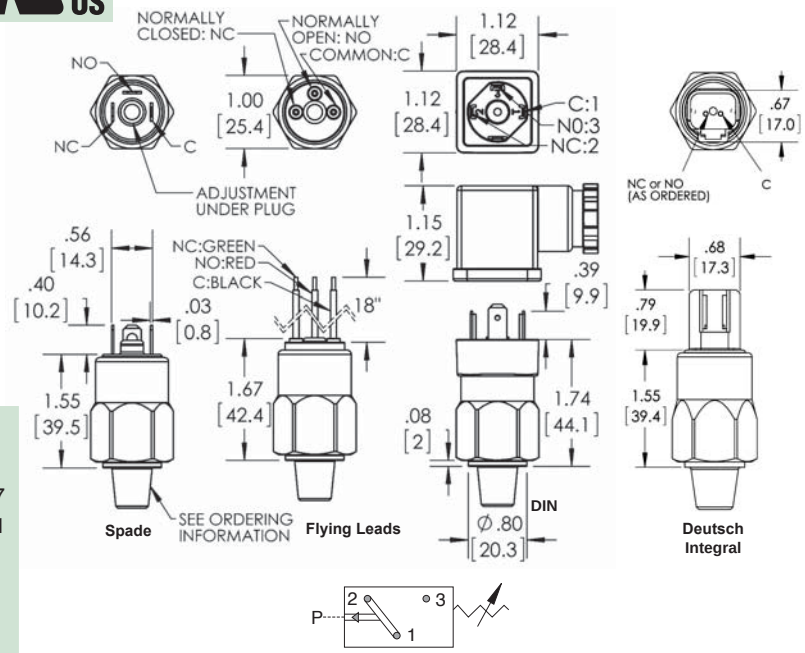

Model	Adjustment Range		Average Differential	
	PSI	Bar	PSI	Bar
1	5 - 85	.35 - 6	3 - 10	0.21 - 0.7
1A	65 - 300	4 - 20	8 - 30	0.55 - 2.1
2	125 - 600	8 - 40	20 - 80	1.3 - 5.5
3	300 - 2500	20 - 170	50 - 300	3.2 - 20
4	1000 - 6000	69 - 400	150 - 600	10 - 41
5	500 - 3500	35 - 240	75 - 300	5 - 24

ELECTRICAL:

Standard: 3A, 125VAC - U.L. Recognized*
Option -7: 0.2A, 60VDC - U.L. Recognized*
Option -9: 5A, 250VAC - U.L. Recognized*
5A, 12/24VDC - U.L. Recognized*

MANUFACTURER'S OTHER RATING:
3A @ 40VDC

PROTECTION:

Exposed Terminals – IP00
DIN HC - IP65
Flying Leads, M12, Deutsch Integral - IP69

MECHANICAL LIFE:

1,000,000 cycles

SWITCH TYPE:

Snap Action

REPEATABILITY:

± 2% of full set point range at 70°F (21°C) Ambient Temperature

MAXIMUM OVERPRESSURE:

9000 PSI (620 Bar)

TEMPERATURE RANGE:

Buna – N: -15° to +230°F (-26° to 110°C)
EPDM: -10° to +250°F (-23° to 121°C)
KAPTON®: -40° to +230°F (-40° to 110°C)
VITON®: 0° to +250°F (-18° to 121°C)
(® Registered Trademark of DuPont)
HNBR: -36° to +293°F (-38° to 145°C)

WETTED MATERIAL:

Diaphragm: Buna-N (Standard)
(optional EPDM, KAPTON®,HNBR,VITON®)

Housing: Trivalent Chromate Plated Steel
(optional Steel - Electroless Nickel Plated)
(optional 316 Stainless Steel)

WEIGHT:

0.2 LBS
(0.09 kg)

ORDERING INFORMATION

BPA	*- * 2*	*- * R*	*- 4M*	*- C*	*- H*	*- * 1*
Model	**Set Point**	**Direction**	**Port Size**	**Circuit**	**Terminal**	**Options**
BPA - Field Adjustable BPF - Factory Set	See Above Adjustment Ranges **Model BPF Specify Set Point Required*	R - PSI Rising F - PSI Falling BR - Bar Rising BF - Bar Falling **Omit For Model BPA*	2M - 1/8 NPT 4M - 1/4 NPT 2G - 1/8 BSPP 4G - 1/4 BSPP 4S - 7/16X20 SAE MALE 4SW - 7/16X20 SAE Swivel 6S - 9/16X18 SAE MALE M10 - M10X1 M12 - M12X1.5 *Consult Factory for Specials.*	A - SPST / NO B - SPST / NC C - SPDT	SP - 1/4" x 1/32" Spade TS - 6-32 Terminal Screws FL - 18" Flying Leads FLWTF - Weatherpack Tower Female FLWTM - Weatherpack Tower Male FLWSF - Weatherpack Shroud Female FLWSM - Weatherpack Shroud Male H - DIN 43650A Male Half Only HC - DIN 43650A Cable Clamp HN - DIN 43650A 1/2 Conduit (female) HCC - XXX (Specify Length in Inches) HC11A - DIN Light NO/NC 110V HC11B - DIN Light NO/NC 12VDC HC11C - DIN Light NO/NC 24VDC HC11D - Indicating Light Green/Red DI - Deutsch Integral M12 - M12 X 1	* - Omit If Standard 1 - VITON® Diaphragm 2 - EPDM Diaphragm 3 - KAPTON® Diaphragm 13 - HNBR Diaphragm 4 - 316 SS Housing 4A - Steel - Electroless Nickel Plated 5 - Spiral Restrictor 6 - Oxygen Cleaned 7 - Gold Contacts 9 - 5 AMP Rating UL - UL Recognized** **For Selected Models Only - Consult Factory

PVS Sensors Inc.

BMA/BMF Pressure Switch

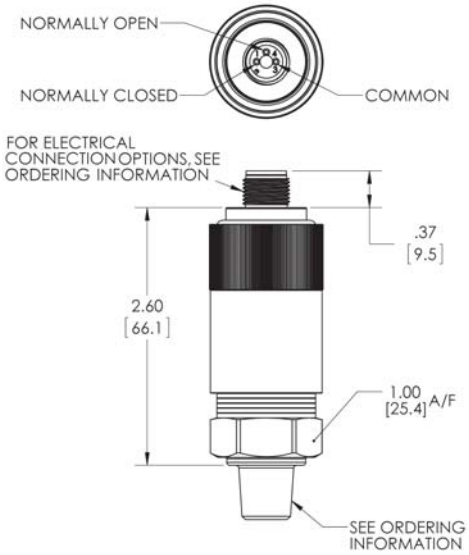

Model	Adjustment Range		Average Differential	
	PSI	Bar	PSI	Bar
1	15 - 120	1.00 - 8	6 - 11	0.4 - 0.8
2	40 - 450	3 - 30	20 - 110	1.4 - 8
3	250 - 1750	17 - 120	50 - 140	3.4 - 9.6
4	1500 - 7500	100 - 520	250 - 350	17 - 24

ELECTRICAL:

Standard: 5A, 125/250VAC - U.L. Recognized*
5A, 12/24VDC - U.L. Recognized*
Option -7: 0.2A, 60VDC - U.L. Recognized*

PROTECTION:

Exposed Terminals – IP00
DIN HC - IP65
Flying Leads, M12, Deutsch Integral - IP69

MECHANICAL LIFE:

1,000,000 cycles

MANUFACTURER'S OTHER RATING:

Standard: 5A, 24VDC

SWITCH TYPE:

Snap Action

REPEATABILITY:

± 2% of full set point range at 70°F (21°C) Ambient Temperature

MAXIMUM OVERPRESSURE:

15000 PSI (1030 Bar)

TEMPERATURE RANGE:

Buna – N: -15° to +230°F (-26° to 110°C)
EPDM: -10° to +250°F (-23° to 121°C)
KAPTON®: -40° to +230°F (-40° to 110°C)
VITON®: 0° to +250°F (-18° to 121°C)
(® Registered Trademark of DuPont)
HNBR: -36° to +293°F (-38° to 145°C)

WETTED MATERIAL:

Diaphragm: Buna-N (Standard)
(optional EPDM, KAPTON®,HNBR,VITON®)

Housing: Trivalent Chromate Plated Steel
(optional Steel - Electroless Nickel Plated)
(optional 316 Stainless Steel)

WEIGHT:

0.2 LBS
(0.09 kg)

ORDERING INFORMATION

BMA	*- * 2*	*- * R*	*- 4M*	*- C*	*- H*	*- * 1*
Model	**Set Point**	**Direction**	**Port Size**	**Circuit**	**Terminal**	**Options**
BMA - Field Adjustable BMF - Factory Set	See Above Adjustment Ranges **Model BMF Specify Set Point Required*	R - PSI Rising F - PSI Falling BR - Bar Rising BF - Bar Falling **Omit For Model BMA*	2M - 1/8 NPT 4M - 1/4 NPT 2G - 1/8 BSPP 4G - 1/4 BSPP 4S - 7/16X20 SAE MALE 4SW - 7/16X20 SAE Swivel 6S - 9/16X18 SAE MALE M10 - M10X1 M12 - M12X1.5 *Consult Factory for Specials.*	A - SPST / NO B - SPST / NC C - SPDT	SP - 1/4" x 1/32" Spade TS - 6-32 Terminal Screws FL - 18" Flying Leads FLWTF - Weatherpack Tower Female FLWTM - Weatherpack Tower Male FLWSF - Weatherpack Shroud Female FLWSM - Weatherpack Shroud Male H - DIN 43650A Male Half Only HC - DIN 43650A Cable Clamp HN - DIN 43650A 1/2 Conduit (female) HCC - XXX (Specify Length in Inches) HC11A - DIN Light NO/NC 110V HC11B - DIN Light NO/NC 12VDC HC11C - DIN Light NO/NC 24VDC HC11D - Indicating Light Green/Red DI - Deutsch Integral M12 - M12 X 1	* - Omit If Standard 1 - VITON® Diaphragm 2 - EPDM Diaphragm 3 - KAPTON® Diaphragm 13 - HNBR Diaphragm 4 - 316 SS Housing 4A - Steel - Electroless Nickel Plated 5 - Spiral Restrictor 6 - Oxygen Cleaned 7 - Gold Contacts UL - UL Recognized** **For Selected Models Only - Consult Factory

PVS Sensors Inc.

EPA/EPF Pressure Switch

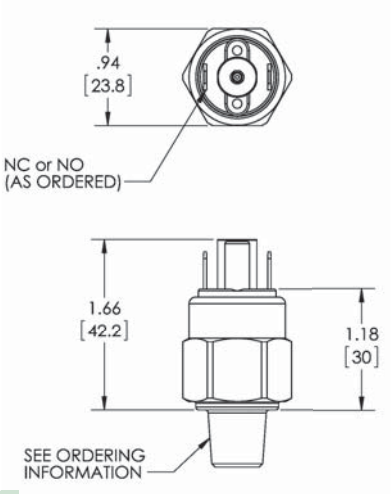

Spade

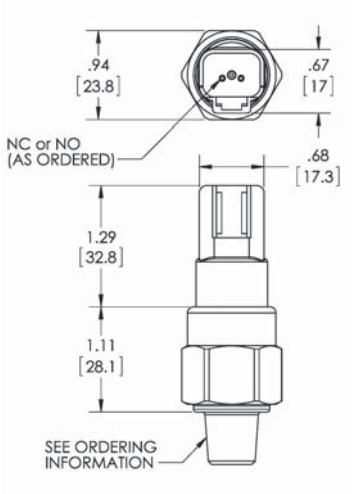

Deutsch Integral

Model	Adjustment Range PSI	Adjustment Range Bar	Average Differential
1	1.5 - 30	0.10 - 2.0	Less than 10% of Actuation Point
1A	14.5 - 200	1.0 - 14	
2	125 - 600	8 - 40	
3	300 - 2500	20 - 170	
4	3000 - 6000	207 - 400	
5	500 - 3500	35 - 240	

ELECTRICAL:

100 VA Max Voltage 42 VDC
Gold contacts may be required for less than 12 VDC and 20 milliamp

SWITCH TYPE:

Creep Action

TEMPERATURE RANGE:

Buna – N: -15° to +230°F (-26° to 110°C)
EPDM: -10° to +250°F (-23° to 121°C)
KAPTON®: -40° to +230°F (-40° to 110°C)
VITON®: 0° to +250°F (-18° to 121°C)
(® Registered Trademark of DuPont)
HNBR: -36° to +293°F (-38° to 145°C)

PROTECTION:

Exposed Terminals - IP00
Flying Leads & Deutsch Integral - IP69

REPEATABILITY:

± 3% of full set point range at 70°F (21°C) Ambient Temperature

WETTED MATERIAL:

Diaphragm: Buna-N (Standard)
(optional EPDM, KAPTON®, HNBR,VITON®)

Housing: Trivalent Chromate Plated Steel
(optional Steel - Electroless Nickel Plated)
(optional 316 Stainless Steel)

MECHANICAL LIFE:

1,000,000 cycles

MAXIMUM OVERPRESSURE:

9000 PSI (620 Bar)

WEIGHT:

0.15 LBS
(0.07 kg)

ORDERING INFORMATION

EPA	*- * 2*	*- * R*	*- 4M*	*- A*	*- FL*	*- *1*
Model	**Set Point**	**Direction**	**Port Size**	**Circuit**	**Terminal**	**Options**
EPA - Field Adjustable EPF - Factory Set	See Above Adjustment Ranges **Model EPF Specify Set Point Required*	R - PSI Rising F - PSI Falling BR - Bar Rising BF - Bar Falling **Omit for Model EPA*	2M - 1/8 NPT 4M - 1/4 NPT 4G - 1/4 BSPP 4S - 7/16X20 SAE MALE 6S - 9/16X18 SAE MALE M10 - M10X1 M12 - M12X1.5 *Consult Factory for Specials.*	A - SPST / NO B - SPST / NC	SP - 1/4 x 1/32 Spade TS - 6 -32 Terminal Screws FL - 18" Flying Leads FLWTF - Weatherpack Tower Female FLWTM - Weatherpack Tower Male FLWSF - Weatherpack Shroud Female FLWSM - Weatherpack Shroud Male DI - Deutsch Integral	* - Omit If Standard 1 - VITON® Diaphragm 2 - EPDM Diaphragm 3 - KAPTON® Diaphragm 13 - HNBR Diaphragm 4 - 316 SS Housing 4A - Steel - Electroless Nickel Plated 5 - Spiral Restrictor 6 - Oxygen Cleaned 7 - Gold Contacts

PVS Sensors Inc.

CPA/CPF Pressure Switch

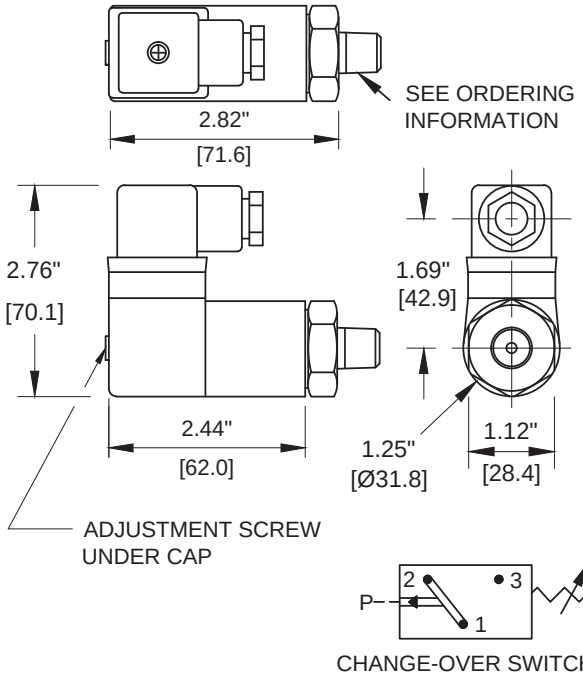

Model	Adjustment Range		Average Differential	
	PSI	Bar	PSI	Bar
1	15 - 120	1.00 - 8	6 - 11	0.4 - 0.8
2	40 - 450	3 - 30	20 - 110	1.4 - 8
3	250 - 1750	17 - 120	50 - 140	3.4 - 9.6
4	1500 - 7500	100 - 520	250 - 350	17 - 24

ELECTRICAL:

Standard: 10A, 250VAC 3A, 30VDC - U.L. Recognized*
Option -7: 0.1A, 125/250VAC - U.L. Recognized*

MANUFACTURER'S OTHER RATING:
Standard: 5A, 12/24VDC

SWITCH TYPE:

Snap Action

TEMPERATURE RANGE:

Buna – N: -15° to +230°F (-26° to 110°C)
EPDM: -10° to +250°F (-23° to 121°C)
KAPTON®: -40° to +230°F (-40° to 110°C)
VITON®: 0° to +250°F (-18° to 121°C)
(® Registered Trademark of DuPont)

PROTECTION:

IP65 except exposed terminals – IP00

REPEATABILITY:
± 2% of full set point range at 70°F (21°C) Ambient Temperature

WETTED MATERIAL:

Diaphragm: Buna-N (standard)
(optional EPDM, KAPTON® and VITON®)
Port: Zinc Plated Steel
(Optional 316 Stainless Steel)

HOUSING/PORT MATERIAL:

Housing: Aluminum AL2024 Anodized
(Optional 316 Stainless Steel)

Port: Zinc Plated Steel
(Optional 316 Stainless Steel)

MECHANICAL LIFE:

1,000,000 cycles

MAXIMUM OVERPRESSURE:

15,000 PSI (1030 Bar)

WEIGHT:

0.7 LBS
(0.32 kg)

ORDERING INFORMATION

CPA	*- * 2*	*- * R*	*- 4M*	*- C*	*- H*	*- * 1*
Model	**Set Point**	**Direction**	**Port Size**	**Circuit**	**Terminal**	**Options**
CPA - Field Adjustable CPF - Factory Set	See Above Adjustment Ranges **Model CPF Specify Set Point Required*	R - PSI Rising F - PSI Falling BR - Bar Rising BF - Bar Falling **Omit For Model CPA*	4M - 1/4 NPT 4G - 1/4 BSPP 4S - 7/16X20 SAE MALE 4SW - 7/16X20 SAE Swivel 6S - 9/16X18 SAE MALE *Consult Factory for Specials*	C - SPDT	H - DIN 43650A Male Half Only HC - DIN 43650A Cable Clamp HN - DIN 43650A 1/2 Conduit (female) HCC - XXX (Specify Length in Inches) HC11A - DIN Light NO/NC 110V HC11B - DIN Light NO/NC 12VDC HC11C - DIN Light NO/NC 24VDC HC11D - Indicating Light Green/Red	* - Omit If Standard 1 - VITON® Diaphragm 2 - EPDM Diaphragm 3 - KAPTON® Diaphragm 4 - 316 SS Housing 5 - Spiral Restrictor 6 - Oxygen Cleaned 7 - Gold Contacts 10A - 316 SS Port UL - UL Recognized** **For Selected Models Only - Consult Factory

PVS Sensors Inc.

FDA/FDF Differential Switch

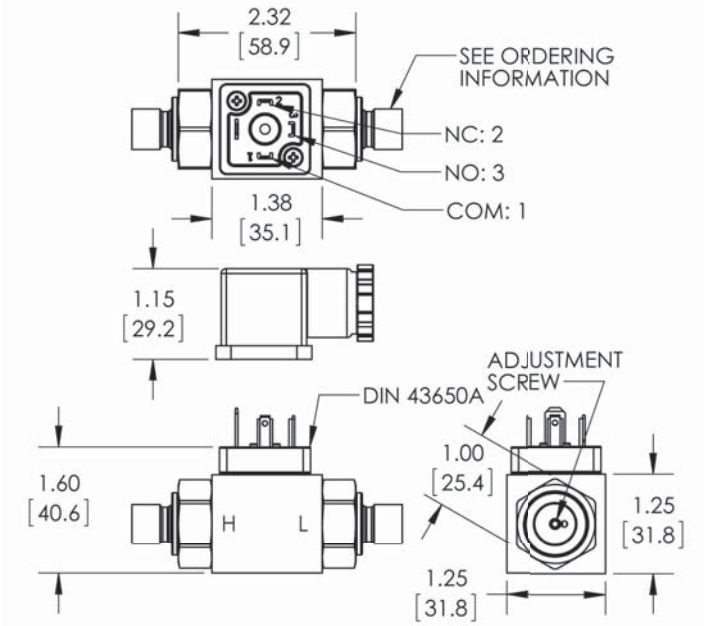

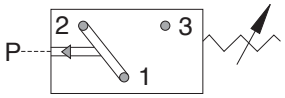

Model	Adjustment Range		Average Differential	
	PSI	Bar	PSI	Bar
1	5 - 25	0.34 - 1.7	3 - 8	0.2 - 0.4
2	20 - 45	1.3 - 3	5 - 15	0.35 - 1
3	35 - 75	2.4 - 5	10 - 20	0.7 - 1.4

ELECTRICAL:

10 AMP - 12/24 VDC - 125/250 VAC
Gold contacts may be required for less than 12 VDC and 20 milliamp
SPDT - Standard Circuit

PROTECTION:

IP65 except exposed terminals – IP00

MECHANICAL LIFE:

1,000,000 cycles

SWITCH TYPE:

Snap Action

REPEATABILITY:

± 2% of full set point range at 70°F (21°C) Ambient Temperature

MAXIMUM OVERPRESSURE:

500 PSI (35 Bar)

TEMPERATURE RANGE:

Buna –N: -15° to +230°F (-26° to 110°C)
EPDM: -10° to +250°F (-23° to 121°C)
VITON®: 0° to +250°F (-18° to 121°C)
(® Registered Trademark of DuPont)

WETTED MATERIAL:

Diaphragm: Buna-N (standard)
(optional EPDM and VITON®)

Ports: Trivalent Chromate Plated Steel
(optional 316 Stainless Steel)
(optional Brass)

HOUSING:

Aluminum AL2024 Anodized

WEIGHT:

0.40 LBS
(0.18 kg)

ORDERING INFORMATION

FDA	*- * 1*	*- 4M / 4M*		*- HC*	*- *1*
Model	**Set Point**	**Port Size**		**Terminal**	**Options**
FDA - Field Adjustable FDF - Factory Set	See Above Adjustment Ranges **Model FDF Specify Set Point Required*	**Hi Port** 4M - 1/4 NPT MALE 4G - 1/4 BSPP MALE 4S - 7/16X20 SAE MALE	**Low Port** 4M - 1/4 NPT MALE 4G - 1/4 BSPP MALE	H - DIN 43650A Male Half Only HC - DIN 43650A Cable Clamp HN - DIN 43650A 1/2 Conduit (female) HCC - XXX (Specify Length in Inches) HC11A - DIN Light NO/NC 110V HC11B - DIN Light NO/NC 12VDC HC11C - DIN Light NO/NC 24VDC HC11D - Indicating Light Green/Red	* - Omit If Standard 1 - VITON® Diaphragm 2 - EPDM Diaphragm 5 - Spiral Restrictor 6 - Oxygen Cleaned 7 - Gold Contacts 10 - Brass Port 10A - 316 Stainless Steel Port

TCM Temperature Switch
Bi-Metal

PVS Sensors Inc.

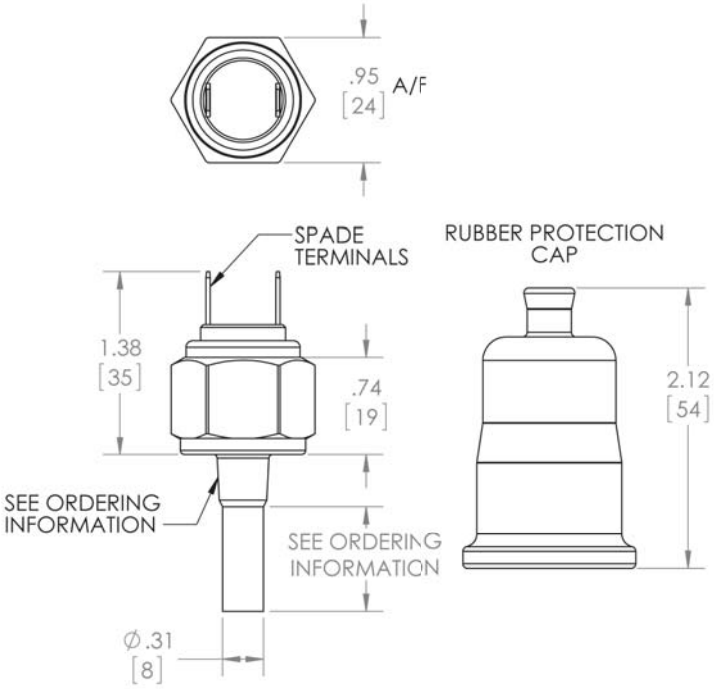

The TCM series is a Bi-Metal temperature switch with a factory set point. The switch is used for protection of all types of internal combustion engines, pumps, compressors, gear boxes, hydraulic reservoirs, marine and industrial power plants.

ELECTRICAL:
5A - 240 VAC (Resistive)
6A - 24 VDC (Resistive)

PROTECTION:
IP00 - Without Rubber Cap
IP54 - With Rubber Cap

SETTING TOLERANCE:
± 6.5°F (±3.5°C)

CIRCUIT:
SPST - NO
SPST - NC

MAXIMUM WORKING TEMPERATURE:
400°F (204°C)

MAXIMUM PROBE PRESSURE:
1000 PSI (69 Bar)

HOUSING MATERIAL:
Brass

TEMPERATURE DIFFERENTIAL:
10°F (5°C) AVERAGE

TIGHTENING TORQUE:
14.4 ft-lbs (19.6 Nm)

PROBE LENGTHS:
See Ordering Information

TEMPERATURE RANGE:
75° - 290°F (24° - 143°C)

WEIGHT:
0.65 lbs (0.29 kg)

ORDERING INFORMATION
Minimum Order Required - Consult Factory

TCM	*- 100F*	*- R*	*- 2M*	*- A*	*- SP*	*- A*
Model	**Temperature Set Point**	**Direction**	**Port Size**	**Circuit**	**Terminal**	**Probe Length**
TCM	Specify Set Point Required F or C 75° to 290°F (24° to 143°C)	R - Temperature Rising F - Temperature Falling	2M - 1/8 NPT 4M - 1/4 NPT 6M - 3/8 NPT 8M - 1/2 NPT	A - SPST / NO B - SPST / NC	SP - Spade (Includes Rubber Protection Cap) FL - 18” Flying Leads	A - 1/2” B - 1” C - 2”

TBM Temperature Switch
Bi-Metal

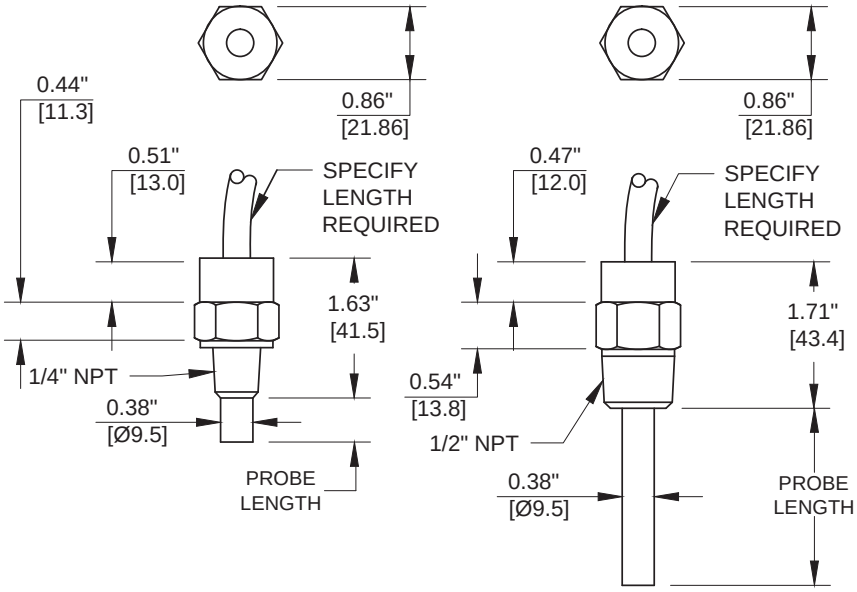

The TBM series is a Bi-Metal temperature alarm switch with a factory set point. The switch is used for protection of all types of internal combustion engines, pumps, compressors, gear boxes, hydraulic reservoirs, marine and industrial power plants.

ELECTRICAL:
7A - 120 VAC (Resistive)
4A - 24 VDC (Resistive)

PROTECTION:
IP67

SETTING TOLERANCE:
± 7°F

CIRCUIT:
SPST - NO
SPST - NC

MAXIMUM WORKING TEMPERATURE:
400°F (204°C)

MAXIMUM PROBE PRESSURE:
1000 PSI (69 Bar)

HOUSING MATERIAL:
Brass

TEMPERATURE DIFFERENTIAL:
10°F (5°C) AVERAGE

TIGHTENING TORQUE:
18 ft-lbs (25Nm)

PROBE LENGTHS:
See Ordering Information

TEMPERATURE RANGE:
75° - 290°F (24° - 143°C)

WEIGHT:
0.70 lbs
(0.32 kg)

ORDERING INFORMATION
Minimum Order Required - Consult Factory

TBM	*- 100F*	*- R*	*- 8M*	*- B*	*- 108*	*- A*
Model	**Temperature Set Point**	**Direction**	**Port Size**	**Circuit**	**Terminal**	**Probe Length**
TBM	Specify Set Point Required F or C 75° to 290°F (24° to 143°C)	R - Temperature Rising F - Temperature Falling	2M - 1/8 NPT 4M - 1/4 NPT 6M - 3/8 NPT 8M - 1/2 NPT	A - SPST / NO B - SPST / NC	Cable Specify Length Required in Inches Minimum 36”	A - 1/2” B - 1” C - 2”

TAF Temperature Switch
Bi-Metal

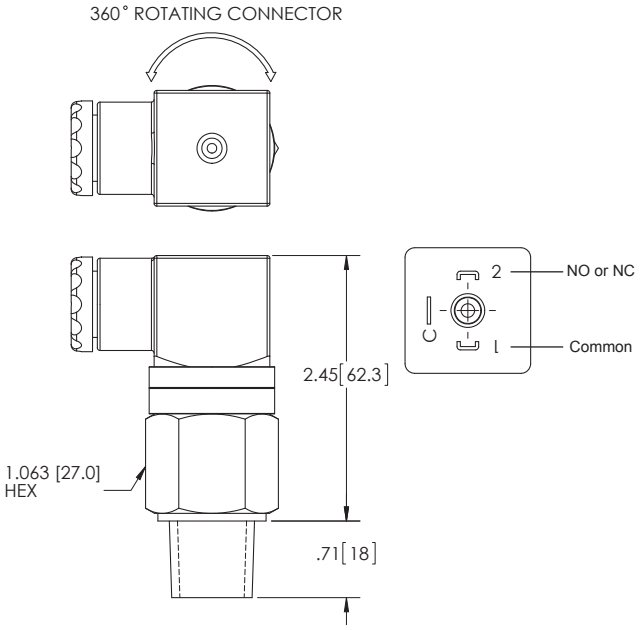

The TAF is a factory set temperature alarm switch for protection of all types of internal combustion engines, pumps, compressors, gear boxes, and hydraulic reservoirs.

ELECTRICAL:
4A - 24 VDC Resistive
6A - 240 VAC Resistive

CIRCUIT:
SPST - Normally Open
SPST - Normally Closed

HOUSING MATERIAL:
Brass

PROTECTION:
DIN 43650A - IP65

TEMPERATURE DIFFERENTIAL:
25°F (14°/16°C) AVERAGE

MAXIMUM WORKING PRESSURE:
350 PSI (25 Bar)

TEMPERATURE RANGE:
75° - 290°F (24° - 143°C)

TEMPERATURE EXPOSURE LIMIT:
300°F (149°C)

TIGHTENING TORQUE:
22 ft-lbs (30 Nm)

WEIGHT:
0.3 lb
(0.14 kg)

ORDERING INFORMATION
Minimum Order Required - Consult Factory

TAF	*- 100F*	*- R*	*- 4M*	*- A*	*- H*
Model	**Temperature Set Point**	**Direction**	**Port Size**	**Circuit**	**Terminal**
TAF Factory Set	Specify Set Point Required F or C 75° to 290°F (24° to 143°C)	R - Temp Rising F - Temp Falling	4M - 1/4 NPT 6M - 3/8 NPT 8M - 1/2 NPT	A - SPST / NO B - SPST / NC	H - DIN43650A Male Half Only HC - DIN43650A Cable Clamp HN - DIN43650A 1/2" Conduit (female) HCC - 36" Cable HC11A - DIN Light NO/NC 110V HC11B - DIN Light NO/NC 12VDC HC11C - DIN Light NO/NC 24VDC HC11D - Indicating Light Green/Red

TFF Temperature Switch
Fluid Expansion

Standard port is 1/2 NPT

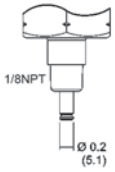

1/8 NPT Port as Shown
Special Order Only

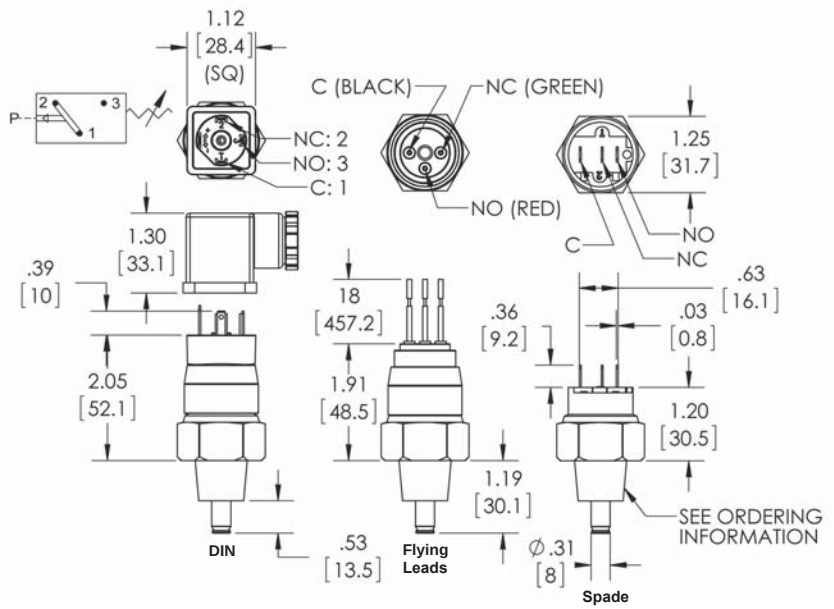

The PVS model TFF is a factory set temperature alarm switch for protection of all types of engines, pumps, compressors, gear boxes, hydraulic reservoirs, marine and industrial power plants. The TFF provides fast accurate temperature response through a brass probe that protrudes into the application.

ELECTRICAL:
5A - 24 VDC (Resistive)
2A - 24 VDC (Inductive)

PROTECTION:
DIN 43650A-IP65
Terminals-IP00
Flying Leads-IP65

MAX TIGHTENING TORQUE:
40 ft-lbs (54 Nm)

CIRCUIT:
SPDT (standard)

ACCELERATION:
Up to 8G

DIFFERENTIAL:
19°F (9°C Nominal)

TOLERANCE:
± 6°F (3°C)

MAXIMUM WORKING PRESSURE:
175 PSI (12 BAR)

MAXIMUM BODY TEMPERATURE:
248°F (120°C) Ambient

OPERATING RANGE:
70° - 285°F (21° - 141°C)

MAXIMUM OVERLOAD:
77°F (25°C) Above set point

HOUSING:
Steel, Zinc Plated Passivated

ORDERING INFORMATION

TFF	*- 100F*	*- R*	*- 8M*	*- C*	*- SP*
Model	**Temperature Set Point**	**Direction**	**Port Size**	**Circuit**	**Terminal**
TFF	Specify Set Point Required F or C 70° - 285°F (21° - 141°C)	R - Temperature Rising F - Temperature Falling	2M - 1/8 NPT* 4M - 1/4 NPT* 6M - 3/8 NPT* 8M - 1/2 NPT ** Special Order Minimum quantity required*	C - SPDT (standard) *A - SPST - NO *B - SPST - NC **FL Only*	SP - Spade FL - Flying Leads 18” H - DIN43650A Male Half Only HC - DIN43650A Cable Clamp HN - DIN43650A 1/2” Conduit (female) HCC - 36” Cable HC11A - DIN Light NO/NC 110V HC11B - DIN Light NO/NC 12VDC HC11C - DIN Light NO/NC 24VDC HC11D - Indicating Light Green/Red

TAS/TFS Temperature Switch
Fluid Expansion

PVS Sensors Inc.

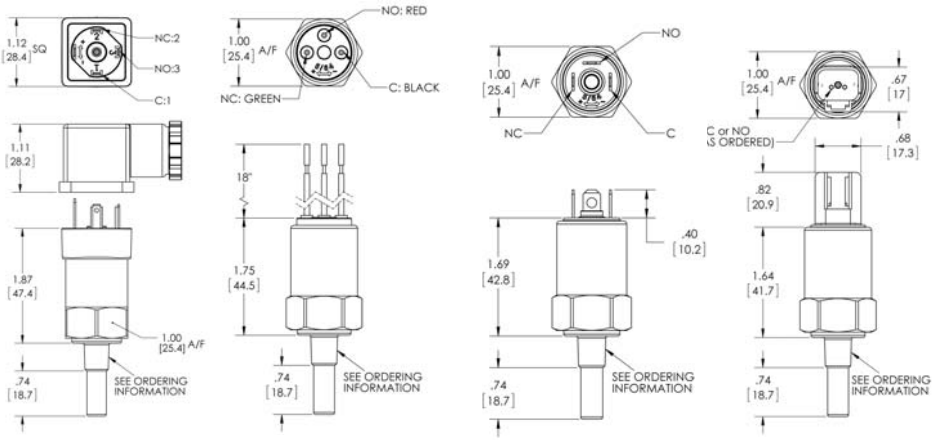

DIN | **Flying Leads** | **Spade** | **Deutsch Integral**

Model	Adjustment Range		Average Differential	
	Fahrenheit	Celsius	Fahrenheit	Celsius
1	70°F - 128°F	21°C - 53°C	50°F	10°C
2	129°F - 187°F	54°C - 86°C	50°F	10°C
3	188°F - 285°F	87°C - 141°C	50°F	10°C

The TAS/TFS is a temperature switch for protection of all types of engines, pumps, compressors, gear boxes, hydraulic reservoirs, marine and industrial power plants. It provides fast accurate temperature response through a brass probe that protrudes into the application.

ELECTRICAL:

Electrical Rating - UL Recognized
3 AMP (5 AMP Optional) - 125/250 VAC

Electrical Ratings - Other
3 AMP (5 AMP Optional) - Up to 30 VDC
Gold contacts may be required for less than 12 VDC and 20 milliamp

PROTECTION:

Exposed Terminals – IP00
DIN HC - IP65
Flying Leads & Deutsch Integral - IP69

MAX TIGHTENING TORQUE:

40 ft-lbs (54 Nm)

CIRCUIT:

SPST - Normally Open
SPST - Normally Closed
SPDT

ACCELERATION:

Up to 8G

DIFFERENTIAL:

19°F (9°C Nominal)

TOLERANCE:

± 6°F (3°C)

MAXIMUM WORKING PRESSURE:

175 PSI (12 BAR)

MAXIMUM BODY TEMPERATURE:

248°F (120°C) Ambient

OPERATING RANGE:

70° - 285°F (21° - 141°C)

MAXIMUM OVERLOAD:

77°F (25°C) Above set point

HOUSING:

Brass

ORDERING INFORMATION

TAS	*- 1**	*- R**	*- 4M*	*- C*	*- SP*
Model	**Temperature Set Point**	**Direction**	**Port Size**	**Circuit**	**Terminal**
TAS Field Adjustable TFS Factory Set	See Above Adjustment Ranges Specify Set Point Required F or C 70° - 285°F (21° - 141°C)	R - Temperature Rising F - Temperature Falling ** Omit for TAS*	2M - 1/8 NPT 4M - 1/4 NPT 6M - 3/8 NPT* 8M - 1/2 NPT* ** Special Order Minimum quantity required*	A - SPST / NO B - SPST / NC C - SPDT	SP - Spade FL - Flying Leads 18” H - DIN43650A Male Half Only HC - DIN43650A Cable Clamp HN - DIN43650A 1/2” Conduit (female) HCC - 36” Cable HC11A - DIN Light NO/NC 110V HC11B - DIN Light NO/NC 12VDC HC11C - DIN Light NO/NC 24VDC HC11D - Indicating Light Green/Red DI - Deutsch Integral

TTR Temperature
Transducer

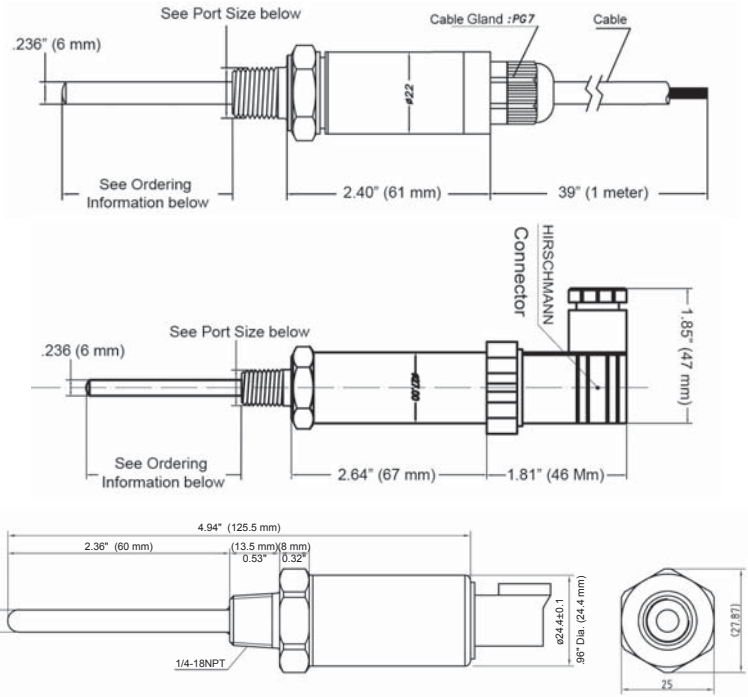

The TTR series is a temperature transducer consisting of a temperature header, module and housing. A signal conditioned output is proportioned to the applied temperature which is amplified, compensated and trimmed by a built in digital ASIC. Heat conductive silicon grease is filled inside the head to ensure the quick conductive of heat and avoid depress for the resistor. Widely used in the following applications: medical equipment, water and oil tanks, refrigerators and constant temperature equipment.

ELECTRICAL:

OUTPUT:	SUPPLY:
4 - 20 mA (2 wire)	10 - 30 VDC
1 - 5 V (3 wire)	10 - 30 VDC
0.5 - 4.5 V (3 wire)	5 V DC

PROTECTION:

IP65 with Standard DIN
IP67 with Cable

TEMPERATURE RANGE:

-58° - 1112°F (-50° - 600°C)

STABILITY:

< 0.25% / Yr (typical)

ACCURACY:

± 0.5% Full Scale

STORAGE TEMPERATURE:

-40° - 257°F (-40° - 125°C)

TEMPERATURE COEFFICIENT:

≤ ± 0.005%/v

RESPONSE TIME:

10 Milliseconds

ERROR ON SUPPLY VOLTAGE:

≤ ± 0.005%/v

PROBE DIAMETER:

.236" (6mm)

MATERIAL:

304 Stainless Steel

ORDERING INFORMATION

TTR	*- A*	*- 0/300*	*- 4M*	*- HC*	*- A*
Model	**Set Type**	**Temperature Range**	**Port Size**	**Terminal**	**Probe Length**
TTR	A: 4 - 20mA (2 Wire) D: 0.5 - 4.5V (3 Wire) E: 1 - 5V (3 Wire)	Specify Temperature Range REQUIRED °F or °C	4M - 1/4 NPT 4S - 7/16 X 20 SAE Male 8M - 1/2 NPT Consult Factory for other sizes	C - 39" (1 Meter) Cable (Std) H - DIN 43650C Male Half Only HCC - 36" Cable HCM - DIN 43650C Mini DIN HCM.A - DIN Light NO/NC 110V HCM.B - DIN Light NO/NC 12VDC HCM.C - DIN Light NO/NC 24VDC HCM.D - Indicating Light Green/Red DI - Deutsch Integral	A - 4" B - 6" C - 10"

WTC Pressure
Thin Film Transducer

PVS Sensors Inc.

Sensing Element: Thin Film

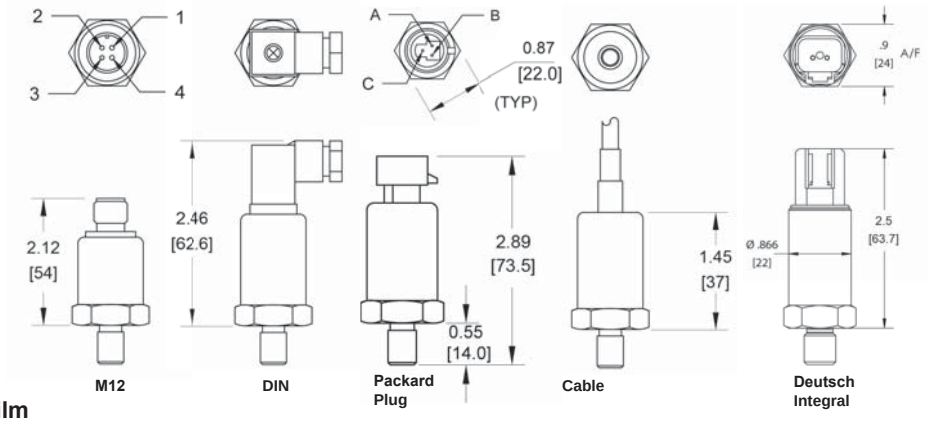

Wiring Data Information												
DIN Connector PIN Function					**Cable Connector WIRE Function**					**Deutsch Pin Wiring**		
Signal Output	Pin 1	Pin 2	Pin 3	Pin 4	Signal Output	RED	BLUE	YELLOW	BLACK	Signal Output	Pin 1	Pin 2
mA	Supply V+	Output	N/A	N/A	mA	Supply V+	Output	N/A	N/A	mA	Supply V+	Output
V	Supply V+	Output	Common	N/A	V	Supply V+	Output	N/A	Common	V	N/A	N/A
M12 PIN Function					**Packard Plug PIN/WIRE Function**							
Signal Output	Pin 1	Pin 2	Pin 3	Pin 4	Signal Output	A/BLACK	B/RED	C/GREEN				
mA	Supply V+	Output	N/A	N/A	mA	Supply V+	N/A	Output				
V	Supply V+	Output	Common	N/A	V	Supply V+	Common	Output				

The WTC series is a pressure transducer based on thin film technology. The sensors feature wide measurement range, accuracy, over pressure resistance and high temperature application. Whole welded construction without o-ring makes the transducer more resistive to over pressure and works well on hydraulic systems and other automatic systems where over pressure, high temperature and stable performance are demanded.

ELECTRICAL:

Output: 4 - 20mA (2 wire)
0 - 5V, 0 - 10V, 0.5 - 4.5V,
1 - 5V (3 wire)
Supply: 12 - 30 VDC (4 Wire)

PROTECTION:

IP69 (Cable or M12X1, Integral Deustch)
IP65 with DIN
IP67 with Packard Plug

PRESSURE RANGE:

Minimum: 0 - 435 PSI (0 - 30 Bar)
Maximum: 0 - 17,000 PSI (0 - 1200 Bar)

OPERATE TEMPERATURE:

-40° to 302°F (-40° to 150°C)

STORAGE TEMPERATURE:

-58° to 257°F (-50° to 125°C)

COMPENSATION TEMPERATURE:

-4° to 248°F (-20° to 120°C)

ACCURACY:

± 0.5% (Full Scan)

RESPONSE TIME:

<10 milliseconds

OVERLOAD PRESSURE:

2 times of range

INSULATION:

>100m Ω@50V

MATERIAL:

Wetted Area: Thin Film
Body: 304 Welded Stainless Steel

PROTECTION STANDARDS:

IEC61000-4-2 Electrostatic Discharge
IEC61000-4-3 Radiated Immunity
IEC61000-4-5 Surge Immunity

ORDERING INFORMATION

WTC	*- A*	*- 0/3000*	*- 4M*	*- HCM*
Model	**Type**	**Pressure Range**	**Connection**	**Terminals**
WTC	A: 4 - 20mA (2 wire) B: 0 - 5V (3 wire) C: 0 - 10V (3 wire) D: 0.5 - 4.5V (3 wire)	Specify Pressure Range Required *Note: Standard Ranges 0/435 PSI, 0/600 PSI, 0/1500 PSI, 0/3000 PSI, 0/5000 PSI, 0/6000 PSI, 0/8700 PSI, 0/11,000 PSI* **Consult Factory for Other Ranges**	4M - 1/4 NPT 4S - 7/16 X 20 SAE MALE 2G - 1/8 BSPP* 4G - 1/4 BSPP* 4GFS - 1/4 BSPP* w/O-ring Face Seal *Non Standard	PP - Packard Plug M - M12X1 C - Cable *(Specify Cable Length, Minimum 3 ft.)* DI - Deutsch Integral (Available in 4-20mA 2 wire ONLY) HCM - DIN 43650C Mini DIN HCM.A - DIN Light NO/NC 110V HCM.B - DIN Light NO/NC 12VDC HCM.C - DIN Light NO/NC 24VDC HCM.D - Indicating Light Green/Red

XTC Pressure Transducer

PVS Sensors Inc.

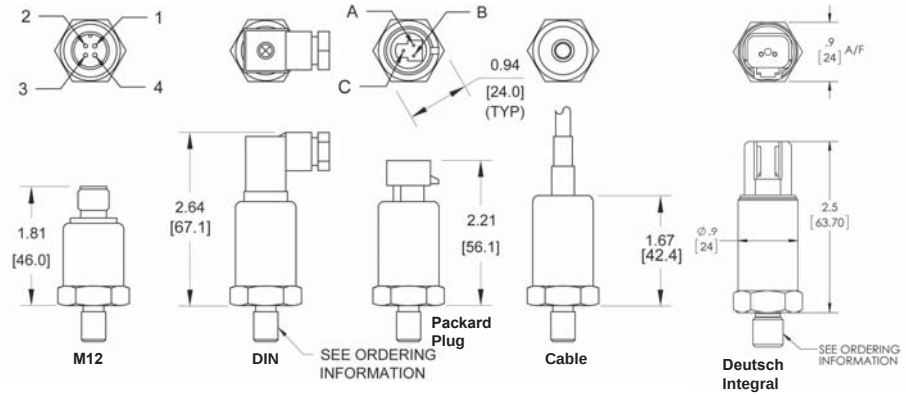

Sensing Element: Ceramic

Wiring Data Information												
DIN Connector PIN Function					**Cable Connector WIRE Function**					**Deutsch Pin Wiring**		
Signal Output	Pin 1	Pin 2	Pin 3	Pin 4	Signal Output	RED	BLUE	YELLOW	BLACK	Signal Output	Pin 1	Pin 2
mA	Supply V+	Output	N/A	N/A	mA	Supply V+	Output	N/A	N/A	mA	Supply V+	Output
V	Supply V+	Common	Output	N/A	V	Supply V+	Output	Common	N/A	V	N/A	N/A
M12 PIN Function					**Packard Plug PIN/WIRE Function**							
Signal Output	Pin 1	Pin 2	Pin 3	Pin 4	Signal Output	A/BLACK	B/RED	C/GREEN				
mA	Supply V+	Output	N/A	N/A	mA	N/A	Supply V+	Output				
V	Supply V+	Common	Output	N/A	V	Common	Supply V+	Output				

The XTC pressure transducers offer high quality, high stability, stainless steel compact design, ideal for the industrial environment. The transducers are widely used in air compressors, air conditioning and refrigeration equipment, automotive and hydraulic control.

ELECTRICAL:

Output: 4 - 20mA (2 wire)
0 - 5V, 0 - 10V, 0.5 - 4.5V,
1 - 5V (3 wire)
Supply: 12 - 30 VDC (2 wire), 5 VDC,
10 - 30 VDC (3 wire)

PROTECTION:

IP69 Cable, Packard or M12
IP65 with DIN
IP69 Deutsch Integral

PRESSURE RANGE:

0 - 9000 PSI (0 - 620 Bar)
For Packard Plug below 750 PSI See YTC Tranducer

OPERATE TEMPERATURE:

-40° to 212°F (-40° to 100°C)

STORAGE TEMPERATURE:

-58° to 257°F (-50° to 125°C)

COMPENSATION TEMPERATURE:

14° to 176°F (-10° to 80°C)

ACCURACY:

± 0.5% (Full Scan)

RESPONSE TIME:

<10 milliseconds

OVERLOAD PRESSURE:

150% Full Scan

INSULATION:

>100m Ω@50V

MATERIAL:

Wetted Area: Ceramic
Body: 304 Stainless Steel

MEDIUM COMPATIBILITY:

Corrosive medium compatible with Cr18Ni9Ti, and ceramic

ORDERING INFORMATION

XTC	*- A*	*- 0/3000*	*- 4M*	*- HCM*
Model	**Type**	**Pressure Range**	**Connection**	**Terminals**
XTC	A: 4 - 20mA (2 wire) B: 0 - 5V (3 wire) C: 0 - 10V (3 wire) D: 0.5 - 4.5V (3 wire) E: 1 - 5V (3 wire)	Specify Pressure Range Required *Note: Standard Ranges 0/100 PSI, 0/300 PSI, 0/600 PSI, 0/1500 PSI, 0/3000 PSI, 0/5000 PSI, 0/6000 PSI, 0/9000 PSI* **Consult Factory for Other Ranges**	4M - 1/4 NPT 4S - 7/16 X 20 SAE MALE 2G - 1/8 BSPP* 4G - 1/4 BSPP* 4GFS -1/4 BSPP* w/O-ring Face Seal *Non Standard	PP - Packard Plug M - M12X1 C - 39" (1 Meter) Cable (Std) H - DIN 43650C Male Half Only HCM - DIN 43650C Mini DIN HCM.A - DIN Light NO/NC 110V HCM.B - DIN Light NO/NC 12VDC HCM.C - DIN Light NO/NC 24VDC HCM.D - Indicating Light Green/Red DI - Deutsch Integral (Available in 4 - 20mA 2 wire ONLY)

YTC Pressure Transducer

PVS Sensors Inc.

Sensing Element: Ceramic

Packard Plug PIN/WIRE Function			
Signal Output	A/BLACK	B/RED	C/GREEN
mA	N/A	Supply V+	Output
V	Common	Supply V+	Output

ELECTRICAL CONNECTION
PACKARD-PLUG

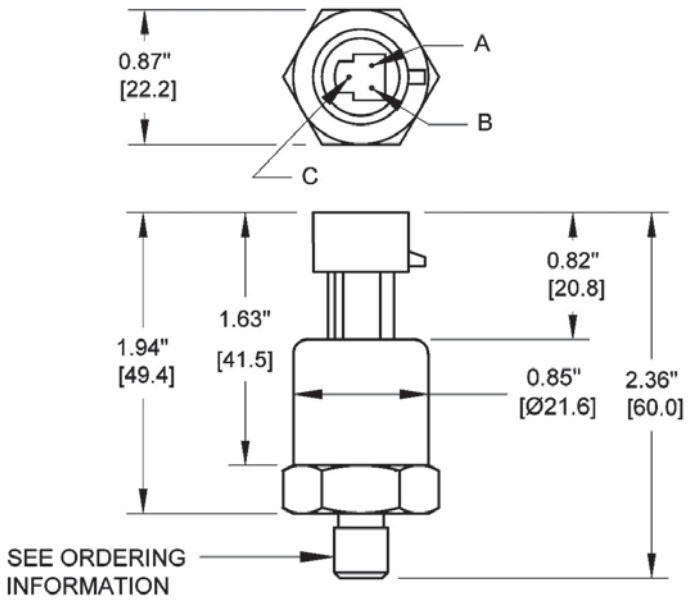

The YTC pressure transducers offer high quality, high stability, stainless steel compact design for use in air compressors, air conditioning and refrigeration equipment, automotive, hydraulic control.

ELECTRICAL:

Output: 4 - 20 mA (2 wire)
0.5 - 4.5V (3 wire)
Supply: 12 - 30 VDC

PROTECTION:

IP67

PRESSURE RANGE:

0 - 750 PSI
(0 - 50 Bar)
(See XTC for Higher Pressure Model)

OPERATE TEMPERATURE:

-40° to 248°F (-40° to 120°C)

STORAGE TEMPERATURE:

-58° to 257°F (-50° to 125°C)

COMPENSATION TEMPERATURE:

14° to 176°F (-10° to 80°C)

ACCURACY:

± 1% (Full Scan)

RESPONSE TIME:

<10 milliseconds

OVERLOAD PRESSURE:

150% (Full Scan)

INSULATION:

>100m Ω @ 50V

MATERIAL:

Wetted Area: Ceramic
Body: 304 Stainless Steel

MEDIUM COMPATIBILITY:

Corrosive medium compatible with Cr18Ni9Ti, and ceramic

ORDERING INFORMATION

Minimum Order Required - Consult Factory

YTC	*- A*	*- 0/750*	*- 4M*	*- PP*
Model	**Type**	**Pressure Range**	**Connection**	**Terminal**
YTC	A: 4 - 20 mA (2 wire) D: 0.5 - 4.5V (3 wire)	Specify Pressure Range Required *Note: Standard Ranges 0/150 PSI, 0/300 PSI, 0/600 PSI, 0/750 PSI* **Consult Factory for Other Ranges**	2M - 1/8" NPT 4M - 1/4" NPT 4S - 7/16X20 SAE Male	PP - Packard Plug (With 22" long Mating Connector Cable)

UTS Pressure Transducer

PVS Sensors Inc.

Sensing Element:
Ceramic

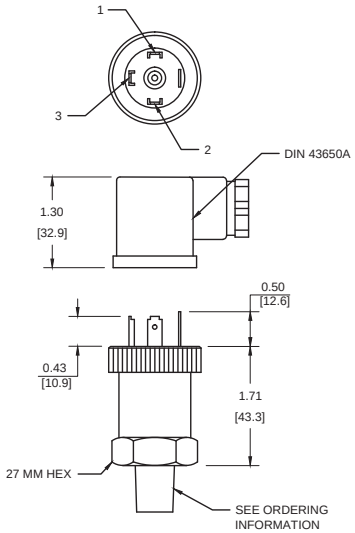

Wiring Data Information				
DIN Electrical Connections PIN Function				
Signal Output	Pin 1	Pin 2	Pin 3	Pin 4
mA	Supply V+	Output	N/A	N/A
V	Supply V+	Output	Common	N/A

The UTS pressure transducer is a compact, heavy duty constructed design suitable for many applications in the machine construction, process control, hydraulic, mobile hydraulic, pneumatic systems, pumps and compressors, gas tank pressure monitoring, industrial test and control.

ELECTRICAL:

(See Ordering Information)
Output: 4 - 20 mA (2 wire)
0 - 5V, 0 - 10V, 0.5 - 4.5V, 1 - 5V (3 Wire)
Supply: 12 - 36 VDC

PROTECTION:

Exposed Terminals – IP00
DIN HC - IP65

PRESSURE RANGE:

0 to 6,000 PSI
(0 to 414 Bar)

OPERATE TEMPERATURE:

-40° to 195°F (-40° to 85°C)

STORAGE TEMPERATURE:

-40° to 212°F (-40° to 100°C)

COMPENSATION TEMPERATURE:

32° to 158°F (0° to 70°C)

ACCURACY:

± 0.5% (Full Scan)

RESPONSE TIME:

<10 milliseconds

OVERLOAD PRESSURE:

150% Full Scan

INSULATION:

>100m Ω@ 50V

MATERIAL:

Wetted Area: Ceramic
Body: 304 Stainless Steel

MEDIUM COMPATIBILITY:

Corrosive medium compatible with Cr18Ni9Ti, and ceramic

ORDERING INFORMATION

UTS	*- A*	*- 0/3000*	*- 4M*	*- HC*
Model	**Type**	**Pressure Range**	**Connection**	**Options**
UTS	A: 4 - 20 mA (2 wire) B: 0 - 5V (3 wire) C: 0 - 10V (3 wire) D: 0.5 - 4.5 (3 wire) E: 1 - 5V (3 wire)	Specify Pressure Range Required *Note: Standard Ranges 0/100 PSI, 0/300 PSI, 0/600 PSI, 0/1500 PSI, 0/3000 PSI, 0/5000 PSI, 0/6000 PSI* **Consult Factory for Other Ranges**	4M - 1/4" NPT 4S - 7/16 X 20 SAE Male 4G - 1/4" BSPP* ** Non-standard*	H - DIN 43650A Male Half Only HC - DIN 43650A Cable Clamp HN - DIN 43650A 1/2" Conduit (female) HCC - 36” Cable HC11A - DIN Light NO/NC 110V HC11B - DIN Light NO/NC 12VDC HC11C - DIN Light NO/NC 24VDC HC11D - Indicating Light Green/Red

ATC Pressure
Transducer

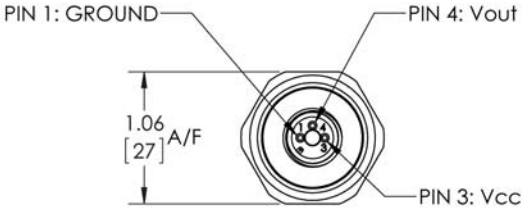

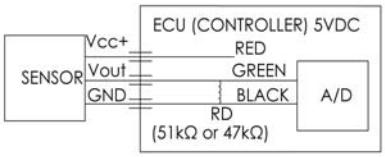

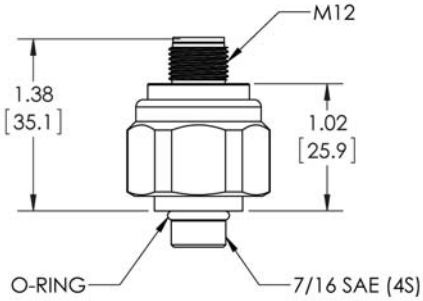

The ATC pressure transducers offer high quality, high stability, compact design for use in air compressors, air conditioning and refrigeration equipment, automotive, hydraulic control.

ELECTRICAL:
Output: 0.5 - 4.5vdc
Supply: 5 +/- 0.25 VDC

PROTECTION:
IP69

OPERATING PRESSURE RANGE:
0 - 3000 PSI
(0 - 206 Bar; 0.01 - 20 Mpa relative pressure)

OPERATING TEMPERATURE:
-22°F to 257°F (-30°C to 125°C)

STORAGE TEMPERATURE:
-40°F to 284°F (-40°C to 140°C)

COMPENSATION TEMPERATURE:
-4°F to 212°F (-20° C to 100°C)

ACCURACY:
± 3.0% Full Scan

OVERPRESSURE
1.5 X Full Scan

BURST PRESSURE:
2.0 X Full Scan

OVERVOLTAGE PROTECTION:
16VDC (VCC = 5.000VDC)

CYCLE LIFE:
1,000,000

MEASURING MEDIA:
Media compatible with the silicon material

ORDERING INFORMATION

ATC	*- D*	*- 0/200*	*- 4M*	*- M*
Model	**Type**	**Pressure Range**	**Connection**	**Terminal**
ATC	D: 0.5 - 4.5 VDC	Specify Pressure Range Required *0/50, 0/75, 0/100, 0/150, 0/200, 0/300, 0/500, 0/600 0/700, 0/750, 0/1000, 0/1500 0/2000, 0/2500, 0/3000 PSI* **Consult Factory for Other Ranges**	4M - 1/4" NPT 4S - 7/16 X 20 SAE Male 4G - 1/4" BSPP* ** Non-standard*	M - M12 X 1 DI - Deustch Integral (3 pin) PP - Packard Plug **Consult Factory for Other Connections**

TDD Transducer
Digital Display

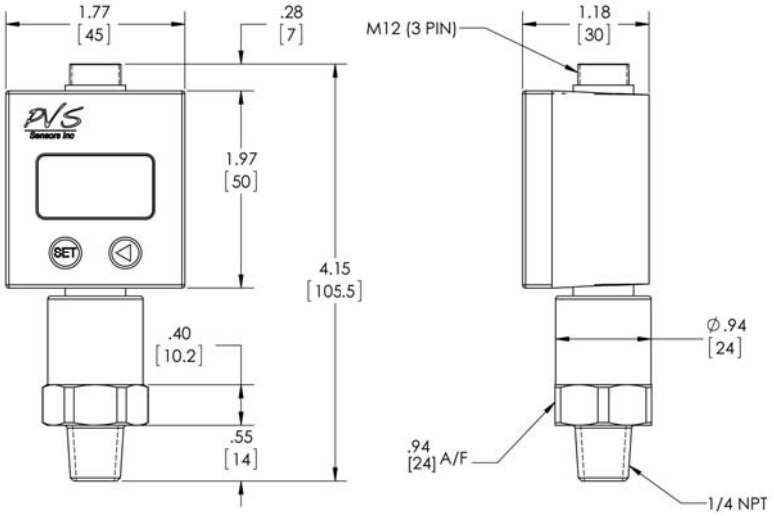

*The **TDD** series transducer with a digital display readout and a 4-20 mA output. It features high accuracy, long term stability,compact and rugged design to measure gas and liquid pressure in a wide range of applications.The high resolution LCD indicator can display the real time pressure value which provides readable information for field engineers. The display buttons on the indicator also provide adjustment to zero and span calibration, unit change.*

ELECTRICAL:

Output: 4 - 20mA (2 wire)
Supplied with standard 79" (2m) connector cable
Power Supply: 18 - 30 VDC

PROTECTION:

IP65 - M12 Cable, DIN

PRESSURE RANGE:

0 - 8700 PSI (0 - 600 Bar)

OPERATING TEMPERATURE:

-40° to 275°F (-40° to 135°C)

STORAGE TEMPERATURE:

-4° to 176°F (-20° to 80°C)

WORKING TEMPERATURE:

14° to 140°F (-10° to 60°C)

ACCURACY:

± 0.5% (Full Scan)

OVERLOAD PRESSURE:

1.5 times of pressure range

MATERIAL:

Wetted Area: Ceramic Sensing
Body: Welded Stainless Steel

INDICATOR:

4 digits (-9999 to 9999 adjustable)
Unit: KPa, MPa, Bar, PSI, %, atm, m

ORDERING INFORMATION

TDD	*- A*	*- 0/100*	*- 4M*	*- M*
Model	**Type**	**Pressure Range**	**Connection**	**Terminal**
TDD	A: 4 - 20 mA (2 wire)	Specify Pressure Range Required *Note: Standard Ranges 0/100 PSI, 0/300 PSI, 0/600 PSI, 0/1500 PSI, 0/3000 PSI, 0/5000 PSI, 0/6000 PSI, 0/8700 PSI* **Consult Factory for Other Ranges**	4M - 1/4 NPT 4S - 7/16 X 20 SAE MALE 4G - 1/4 BSPP* 8M - 1/2 NPT *Non Standard	M - M12 (with 79" mating cable) HCM - DIN43650C Mini Din

PVS Sensors Inc.

Electrical Configuration

			
FL Flying Leads	**SP** “A” or “B” Circuit 1/4” Spades	**SP** “C” Circuit 1/4” Spades	**TS** 6-32 Terminal Screws
			
H DIN 43650A Male Half Only	**HC** DIN 43650A Cable Clamp	**HN** DIN 43650A 1/2” Conduit	**HC11A,B,C & D** DIN 43650A Lighted DIN
			
HCC DIN w/36” Cable	**HCM** DIN 43650C	**HCM.A,B,C & D** DIN 43650C Lighted DIN	**DIFL** Deutsch DT06-2S 2 Pin Plug
			
WTF/WTM Weather Pack Tower 2 Pin Male or Female Pins	**WSF/WSM** Weather Pack Shroud 2 Pin Male or Female Pins	**WTF3/WTM3** Weather Pack Tower 3 Pin Male or Female Pins	**WSF3/WSM3** Weather Pack Shroud 3 Pin Male or Female Pins

PVS Sensors Inc.

Torque Specifications

PIPE RIGID - Tapered Pipe Threads (NPTF, N/NF) Carbon Steel			
Pipe Size	**Turns-from-Finger**	**Max Ft-Lbs**	**Max N-m**
1/8” (-2)	3/4 - 1 3/4	12	16
1/4” (-4)	3/4 - 1 3/4	25	34
3/8” (-6)	3/4 - 1 3/4	40	54
1/2” (-8)	1/2 - 1 1/2	54	73
3/4” (-12)	1/2 - 1 1/2	78	106
1” (-16)	1/2 - 1 1/2	112	152
1 1/4” (-20)	1/2 - 1 1/2	154	209
1 1/2” (-24)	1/2 - 1 1/2	211	286
2” (-32)	1/2 - 1 1/2	300	407

BRITISH STANDARD PARALLEL PIPE (BSPP, ISO 1179)			
Pipe Size	**Turns-from-Finger**	**Max Ft-Lbs**	**Max N-m**
1/8” - 28	2 to 3	13	18
1/4” - 19	2 to 3	37	50
3/8” - 19	2 to 3	46	63
1/2” - 14	2 to 3	118	160
3/4” - 14	2 to 3	148	200
1” -11	2 to 3	250	340
1 1/4” -11	1 1/2 - 2 1/2	332	450
1 1/2” - 11	1 1/2 - 2 1/2	413	560
2” - 11	1 1/2 - 2 1/2		

STUD END O-RING BOSS (ORB) SAE (U/UF)			
Pipe Size	**Thread UNF-2A**	**Max Ft-Lbs**	**Max N-m**
-2	5/16” - 24	6-7	8-9
-3	3/8” - 24	8-9	11-12
-4	7/16” - 20	13-15	18-20
-5	1/2” - 20	17-19	23-26
-6	9/16” - 18	22-24	29-33
-8	3/4” - 16	40-43	49-53
-10	7/8” - 14	43-48	59-64
-12	1 1/16” - 12	68-75	93-102
-14	1 3/16” - 12	90-99	122-134
-16	1 5/16” - 12	112-123	151-166
-20	1 5/8” - 12	146-161	198-218
-24	1 7/8” - 12	154-170	209-231

STUD END O-RING BOSS (ORB) Metric			
Pipe Size	**ME/MCA (Torque N•m)**	**MCB Max Ft-Lbs**	**MB Max N-m**
M8x1	8	n/a	n/a
M10x1	15	9	18
M12x1.5	25	20	30
M14x1.5	35	35	45
M16x1.5	40	45	65
M18x1.5	45	55	80
M22x1.5	60	65	140
M27x2	100	90	190
M30x2	130	n/a	n/a
M33x2	160	150	340
M42x2	210	240	500
M48x2	260	290	630
M60x2	315	n/a	n/a

PVS Sensors Inc.

Degrees of Protection

The IP Specification

FIRST NUMBER
Protection against solid objects

IP	TESTS
0	no protection
1	protected against solid objects up to 50mm (e.g. accidental touch by hands)
2	protected against solid objects up to 12mm (e.g. fingers)
3	protected against solid objects over 2.5mm (tools & wires)
4	protected against solid objects over 1mm (tools, wires & small wires)
5	protected against dust-limited ingress (no harmful deposit)
6	totally protected against dust

SECOND NUMBER
Protection against liquids

IP	TESTS
0	no protection
1	protected against vertically falling drops of water (e.g. condensation)
2	protected against direct sprays of water up to 15° from the vertical
3	protected against sprays to 60° from the vertical
4	protected against water sprayed from all directions limited ingress permitted
5	protected against low pressure jets of water from all directions limited ingress permitted
6	protected against strong jets of water (e.g. for use on ship decks limited ingress protection)
7	protected against the affects of immersions between 15cm and 1m
8	protected against long periods of immersion under pressure
9	protected against highly pressurized water and steam jet cleaning

Material Compatibility

Media	Buna	EP	Viton
Acetic Acid		*	
Acetone		*	
Acetylene	*		
Air	*		
Alcohols	*		
Alkalies (Weak)	*		
Alkalies (Strong)		*	
Ammonia (Anhydrous)	*		
Ammonia (Hydroxide)		*	
Asphalt			*
Automotive Oils	*		
Beer	*		
Benzene			*
Boric Acid	*		
Brake Fluid		*	
Bunker Oil	*		
Butane	*		
Butyl Cellosolve		*	
Carbon Dioxide	*		
Carbon Monoxide	*		
Cellube		*	
Chiorobenzene			*
Citric Acid	*		
Coke Oven Gas			*
Coolant	*		
Diesel Fuels	*		
Di-Ester Lube (MIL-L-7808)			*
Dowtherm A&E		*	
Ethanol	*		
Ether		*	
Ethylene	*		
Ethylene Glycol	*		
Freon 11, 12, 112, 114	*		
Freon 22		*	
Fyrquel		*	
Fuel Oil	*		
Gasoline	*		
Glycerin	*		
Helium	*		
Hexane	*		

Media	Buna	EP	Viton
Hydraulic Oil (PET Base)	*		
Hydrocarbons	*		
Hydrogen	*		
Hydrogen Sulphide		*	
Isopropanol		*	
JP-3-6	*		
Kerosene	*		
LPG	*		
Lube Oil (PET Base)	*		
Methanol	*		
MEK		*	
Mineral Oil	*		
Motor Oils	*		
Naptha		*	
Natural Gas	*		
Nitric Acid		*	
Nitrogen	*		
Cleum Spirits			*
Oxygen	*		
Ozone		*	
Crude Oil	*		
Phosphoric Acid			*
Propane	*		
Propanol	*		
Pydraul		*	
Shell Iris 902	*		
Silicone Greases	*		
Silicone Oils	*		
Skydrol 500 & 7000		*	
Soap Solutions	*		
Steam Below 320°F		*	
Stoddard Solvent	*		
Sulfuric Acid			*
Tolulene			*
Transmission Fluid A	*		
Trisodium Phosphate	*		
Turpentine	*	*	
Water to 220°F (104°C)	*		
Water to 302°F (150°C)		*	

PVS Sensors Inc.

PVS Sensors Inc.
2810 Blue Ridge Blvd.
P.O.Box 100
West Union, SC 29696

To better understand your requirements, please fill out the switch application form below.
Copy and either e-mail to sales@pvssensors.com or fax to 1-864-638-0005

SWITCH APPLICATION

COMPANY NAME:			
CONTACT NAME:		E-MAIL:	
ADDRESS:			
PHONE:		FAX:	
SYSTEM PRESSURE: (NORMAL):		(MAXIMUM):	
PORT CONNECTION:			
SET POINT:	RISING (°F OR °C):		FALLING (°F OR °C):
ADJUSTABLE RANGE:			
CIRCUIT FORM:	SPST -NO (A)	SPST - NC (B)	SPDT (C)
ELECTRICAL:	VAC:	VDC:	
AMPERAGE:	RESISTIVE:	INDUCTIVE:	
ELECTRICAL CONNECTION:			
TEMPERATURE:	(F°)	MEDIUM:	AMBIENT:
CYCLE RATE:			
OTHER SPECIAL REQUIREMENTS:			
APPLICATION:			
YOUR CURRENT SUPPLIER:			
SAMPLE PROTOTYPE(S) REQUIRED BY:			
ESTIMATED ANNUAL USAGE:		TARGET NET PRICE:	

Terms and Conditions

PVS Sensors Inc.

PAYMENT TERMS
Net 30 days. Automatic C.O.D. after 60 days without prior notification, FOB: West Union, SC

WARRANTY
PVS Sensors, Inc. (the "manufacturer") warrants this product only (the "product") to the original purchaser only (the "purchaser") against defective workmanship and materials under normal use of the product for a period of twelve (12) months from the date of shipment by PVS Sensors, Inc. This warranty is absolutely conditional upon the product having been properly installed, maintained and operated under conditions of normal use in accordance with the manufacturers recommended installation and operation instructions. Products which have become defective for any other reason, according to the manufactures discretion, such as improper installation, failure to follow recommended installation and operational instructions, neglect, willful damage, misuse, accidental damage, alteration or tampering, or repair by anyone other than the manufacturer, are not covered under this warranty.

THIS WARRANTY IS EXCLUSIVE AND EXPRESSLY IN LIEU OF ALL OTHER WARRANTIES. OBLIGATIONS OR LIABILITIES, WHETHER WRITTEN, ORAL, EXPRESSED OR IMPLIED, INCLUDING ANY WARRANTY OF MERCHANTABILITY OR FITNESS FOR A PARTICULAR PURPOSE, OR OTHERWISE. IN NO CASE SHALL THE MANUFACTURER BE LIABLE TO ANYONE FOR ANY CONSEQUENTIAL OR INCIDENTAL DAMAGES FOR BREACH OF THIS WARRANTY OR ANY OTHER WARRANTIES WHATSOEVER, AS AFORESAID. THE MANUFACTURER SHALL IN NO EVENT BE LIABLE FOR ANY SPECIAL, INDIRECT, INCIDENTAL, CONSEQUENTIAL OR PUNITIVE DAMAGES OR FOR LOSS, DAMAGE, OR EXPENSE, INCLUDING LOSS OF USE, PROFITS, REVENUE, OR GOODWILL, DIRECTLY OR INDIRECTLY ARISING FROM PURCHASER'S USE OR INABILITY TO USE THE PRODUCT, OR FOR LOSS OR DESTRUCTION OF OTHER PROPERTY OR FROM ANY OTHER CAUSE, EVEN IF MANUFACTURER HAS BEEN ADVISED OF THE POSSIBILITY OF SUCH DAMAGE. THE MANUFACTURER SHALL HAVE NO LIABILITY FOR ANY DEATH, PERSONAL AND/OR BODILY INJURY AND/OR DAMAGE TO PROPERTY OR OTHER LOSS WHETHER DIRECT, INDIRECT, INCIDENTAL, CONSEQUENTIAL OR OTHERWISE, BASED ON A CLAIM THAT THE PRODUCT FAILED TO FUNCTION.

However, if the manufacturer is held liable, whether directly or indirectly, for any loss or damage arising under this limited warranty, the manufacturer's maximum liability (if any) shall not exceed the purchase price of the product, which shall be fixed as liquidated damages and not as a penalty, and shall be the complete and exclusive remedy against the manufacturer.

When accepting the delivery of the product, the purchaser agrees to the said conditions of sale and warranty and he recognizes having been informed of. Some jurisdictions do not allow the exclusion of limitation of incidental or consequential damages, so these limitations may not apply under certain circumstances.The manufacturers obligations under this warranty are limited solely to repair and/or replace at the manufacture's discretion any product or part thereof that may prove defective. Any repair and/or replacement shall not extend the warranty period. The manufacturer shall not be responsible for dismantling and/or reinstallation costs. To exercise this warranty the product must be returned to the manufacturer freight pre-paid and insured. All freight and insurance costs are the responsibility of the purchaser and are not included in this warranty. This warranty shall not be modified, varied or extended, and the manufacturer does not authorize any person to act on its behalf in the modification, variation or extension of this warranty. This warranty shall apply to the product only. This warranty is exclusive to the original purchaser and is not assignable. This warranty is in addition to and does not affect your legal rights. Any provision in this warranty which is contrary to the law in the state or country where the product is supplied shall not apply.

RETURNED GOODS - PVS Sensors Inc. reserves the right to accept material back at our descretion. All returns must be accompanied by our Return Authorization Form. PVS Sensors Inc., is not responsible for material returned without authorization. Material may be returned for a credit less a 25% restocking fee with an order of equal value or less 50% restocking fee without an order of equal value provided materials are in saleable condition and freight is prepaid. All returns for restock must be accompanied by a copy of the original invoice, otherwise items are assumed to have been purchased at the maximum discount and credit is issued accordingly.

CREDIT ISSUE POLICY - Credit balances can be offered by material purchase only. Cash payments are not allowed. PVS Sensors Inc. reserves the right to assess a restocking fee on all items returned for credit.

PRICING - Subject to change without prior notification.

SPECIAL ORDERS - Special orders are not cancellable.

CONDITIONS - PVS Sensors Inc. must have a copy of your sales tax exemption certificate on file. Any discrepancies in either billing or shipping must be reported within 30 days from receipt of order. The carrier must be contacted if package is damaged when received and goods must be kept with original packaging for inspection by the carrier.

Serving these industries and more.

- Off-Highway Vehicles
- Hydraulic Fluid Power Units
- Pneumatic
- Refrigerant
- Water Pumps
- Air Conditioning
- Waste Compaction
- Mining
- Agriculture
- CNC